CHAPTER IX

Motion of Particles in Electrolytic Solutions

93. ELECTROKINETIC PHENOMENA

By particles in electrolytic solutions, we mean particles whose dimensions are so large that they may be considered to form a separate phase. Some examples are colloidal objects of various nature and source, emulsified droplets of water in oil and of oil in water, drops of mercury of relatively large dimensions, etc.

As has been repeatedly stressed above, a region of charged solution, known as the electric double layer, appears at the interface between phases when one of the phases is an electrolytic solution. The presence of an electric double layer on the surface of particles causes peculiar electrical, hydrodynamic effects which are manifested in the motion of the particles through electrolytic solutions. These effects are generally known as electrokinetic phenomena and constitute one of the most important branches of colloid chemistry. Certain electrokinetic phenomena also play an important role in electrochemistry.

The study of this field began with the investigations of F. F. Reyss [1], whose first published work involved liquid motion in dispersed systems. Electrokinetic phenomena were later studied in detail both experimentally and theoretically.

It should be noted at this point that the terminology which has become established in physical chemistry is so involved that one may get the impression that a large number of distinct various electrokinetic phenomena can be observed in nature. Actually, the mechanism of all such phenomena is the same and is associated with the relative displacement of different phases. If a solution containing suspended, dispersed particles is subjected to an external electric field, the particles will begin to move. This has been termed electrophoresis. Electrophoresis is characterized by a relative motion, caused by the electric field, between the dispersed and the liquid phases. Along with electrophoresis, a converse effect is observed in which, due to motion of the particles as a result of nonelectric forces (for example, precipitation in a gravitational field), an electric field (the sedimentation potential) is established in the solution.

Thus, the relative motion of two phases brings about a potential difference in the solution.

The same behavior can also be observed when the moving phase is the solution rather than the dispersed particles. In other words, if an electric field is applied to a solid body-solution interface, i.e., when the solid phase is not dispersed but represents an immobile wall, the solution itself will start to move. It is clear then that only the relative motion of the phases is significant, and that the physical nature of both phenomena — particle motion relative to the solution and motion of the solution relative to fixed walls under the action of an external electric field — are the same even though they may be manifested in different ways. The motion of a solution in a field is termed electro-osmosis. Conversely, when an electrolytic solution flows along an immobile wall, an effect known as the streaming potential is observed, which is essentially the same as the sedimentation potential. Thus, as in the case of sedimentation potentials, the motion of the solution relative to the solid phase causes the appearance of an electric field.

It is natural then that a considerable amount of published material should have been devoted to electrokinetic phenomena. In particular, the electrophoretic process has been the subject of especially detailed experimental and theoretical studies which are of considerable practical significance. Since all electrokinetic phenomena are closely related, it is sufficient to examine the theory of electrophoresis in order that all other phenomena can later be related to it.

In a theoretical examination of electrophoresis, the greatest difficulties are encountered in the case of extremely small particles whose dimensions are comparable to the double layer on their surface. Electrophoresis of such particles has an applied value, especially in biological studies. In most cases, however, we must deal with much larger particles whose dimensions are considerably greater than the thickness of the double layer.

We are concerned in what follows with the latter case, especially in view of the fact that the theory of electrophoresis of small particles has not as yet been sufficiently studied, although in the final analysis the difference in the electrophoresis of large and small particles reduces to a change in the coefficient in the electrophoretic law. This permits us to analyze the basic physical phenomena that occur during electrophoresis without going into unwieldy computations.

94. ELECTROPHORETIC MOTION NEAR A PLANE SURFACE (ELECTRO-OSMOSIS)

The simplest case of electrophoretic motion is the motion of a solution along a given plane.

Let us assume that the solution is bounded by a dielectric plane at $y = 0$. An electric double layer will be set up on the surface of the

dielectric, and near the infinite plane y = 0, a charged region in the volume of the solution will appear whose potential satisfies the Poisson equation

$$\frac{d^2\varphi}{dy^2} = -\frac{4\pi}{D}\rho. \tag{94.1}$$

In the solution let there be an electric field E, whose direction is along the x axis tangential to the solid surface. Then, a force $F_t = \rho E_t$ will be exerted per cm^3 of charged solution (of the double layer) tangential to the surface of the solid body and cause the solution to move according to the equation

$$\mu \frac{d^2v}{dy^2} = -F_t. \tag{94.2}$$

where v is the tangential component of velocity.

Replacing F_t in expression (94.2) by ρE_t, we have:

$$\mu \frac{d^2v}{dy^2} = -\rho E_t. \tag{94.3}$$

and, because of equation (94.1),

$$\mu \frac{d^2v}{dy^2} = \frac{DE_t}{4\pi}\frac{d^2\varphi}{dy^2}. \tag{94.4}$$

Integration of equation (94.4) yields:

$$v = \frac{DE_t}{4\pi\mu}\varphi(y) + Ay + B. \tag{94.5}$$

As the distance from the solid wall increases, the velocity v must remain finite, and, therefore, A = 0. Furthermore, at a certain point in the solution near the solid surface, the velocity of the liquid will be zero due to the absence of slippage. Now, although it is most difficult to determine theoretically the distance from the plane y = 0 (the plane of the solid wall) where the velocity becomes zero, experiments show that it is approximately equal to two or three molecular diameters.

Let us then designate by φ_s the potential in the region where the velocity becomes zero, so that

$$B = -\frac{DE_t}{4\pi\mu}\varphi_s. \tag{94.6}$$

Far from the wall, the potential φ has a constant value, φ_0, equal to the potential difference between the bulk of the solution and the wall. Here, the velocity is also constant and equal to

$$v_0 = \frac{DE_t}{4\pi\mu}(\varphi_0 - \varphi_s). \tag{94.7}$$

The difference ($\varphi_0 - \varphi_S$), which represents the drop in potential across the mobile portion of the double layer, has been termed the ζ-potential

$$\zeta = \varphi_0 - \varphi_s;$$

so that equation (94.7) may then be expressed in a form that is commonly encountered in colloid chemistry:

$$v_0 = \frac{DE_t\zeta}{4\pi\mu}.$$

For later use, it is also convenient to introduce, instead of the ζ-potential, the effective charge ϵ and the thickness d of the double layer as determined by the relation (which is valid for a plane condenser)

$$4\pi\varepsilon d = D\zeta.$$

Then, the velocity of the motion near the solid plane surface can be written in the form

$$v_0 = \frac{\varepsilon d}{\mu} E_t. \tag{94.8}$$

This phenomenon of a liquid motion at a solid surface, when that motion is caused by an electric field applied along the surface, is usually termed electro-osmosis.

95. ELECTROPHORESIS OF SOLID DIELECTRIC PARTICLES

From a knowledge of the velocity of electro-osmotic motion in the vicinity of an infinite plane it is now possible to compute without undue difficulty the velocity of electrophoretic motion of colloidal particles of rather large dimensions. If the size of the particles is large compared to the thickness of the double layer, every section of the particle surface can, with sufficient accuracy, be considered to be a plane. Equation (94.8) may then be applied to the separate sections of the surface.

Let us next pass on to a system in which the particle is at rest, while the liquid moves with a velocity U at infinity. We assume that the particle is a sphere of radius a, and since the electrophoretic velocity is small for all fields attainable in practice, we can also suppose that the motion of the liquid past the particle is of the creeping flow type ($\mathrm{Re} = \frac{Ua}{\nu} \ll 1$).

The equations for creeping flow past a sphere have the form of equations (70.5), (70.6), and (70.7). To derive their solution, a system of boundary conditions must be formulated.

In accordance with what has been said earlier, the liquid far from the particle will move with a constant velocity U which is parallel to the electric field. If the direction of the electric field is chosen as the x axis, the conditions at infinity are

$$\begin{aligned} v_r &\to -U\cos\theta, \\ & \qquad\qquad r\to\infty. \\ v_\theta &\to +U\sin\theta, \end{aligned} \tag{95.1}$$

The boundary conditions on the surface of the particle may on the other hand be formulated in the following manner: at a distance d from the surface, the liquid has a tangential motion with a velocity v_0. Since the particle dimensions are extremely large compared to the thickness of the double layer d, it is possible to assume with sufficient accuracy that the liquid slips past the surface of the particle with a velocity v_0. Thus, we require that

$$v_\theta = +v_0\sin\theta, \tag{95.2}$$

$$\text{at} \quad r\approx a.$$

$$v_r = 0. \tag{95.3}$$

Equation (95.2) represents an original way of accounting for the external force acting on the particle. As soon as the liquid motion along the surface is specified, there is no further need to account for any other forces exerted on the surface, and as a last boundary condition we can therefore require that the viscous friction on the particle be zero. Actually, of course, the viscous friction is not zero. Along with it, however, an external driving force is exerted on the particle which, for steady-state motion, develops precisely that velocity v_0 and the corresponding viscous friction on the surface of the object which matches the driving force. Thus, instead of equating the driving force with the friction, we may assume that the driving force creates the velocity v_0 and that the viscous surface force on the particle equals zero. Now, the total viscous friction exerted on the surface of a spherical particle is determined by the expression

$$\iint (p_{rr}\cos\theta - p_{r\theta}\sin\theta)\,dS = \iint (p_{rr}\cos\theta - p_{r\theta}\sin\theta)\sin\theta\,d\theta\,d\varphi\cdot a^2,$$

so that the last condition which the solution must obey can be written in the form

$$\iint (p_{rr}\cos\theta - p_{r\theta}\sin\theta)\sin\theta\,d\theta\,d\varphi\cdot a^2 = 0. \tag{95.4}$$

Here, in evaluating p_{rr} and $p_{r\theta}$, we should account for the fact that the liquid on the surface of the particle is not motionless, but that it has a velocity given by formula (95.2).

Let us now write down the expressions which characterize the potential distribution in the solution. Outside the double layer the

solution is electrically neutral, and the potential satisfies the Laplace equation

$$\Delta\varphi = 0. \tag{95.5}$$

Far from the particle, the potential must approach that of the constant electric field which is parallel to the x axis,

$$\varphi \to Er\cos\theta. \tag{95.6}$$

The electric field in the vicinity of the dielectric particle differs from the uniform field at infinity: on the one hand, because of its dielectric properties and, on the other hand, because of the convective transfer of ions by the moving solution. Indeed, the motion of the solution entrains the ions, so that a convective electric current appears on the particle surface

$$\mathbf{j}_s = \varepsilon \mathbf{v}_t,$$

where $\mathbf{j}_s$ is the density of the surface current and $\mathbf{v}_t$ is the tangential velocity vector at the surface of the particle; $\mathbf{v}_t$ varies from point to point and its surface divergence, therefore, is not zero; $\operatorname{div}_s \mathbf{j}_s = \operatorname{div}_s(\varepsilon \mathbf{v}_t) \neq 0$. The law of conservation of charge requires than the following condition to be fulfilled

$$\varkappa\left(\frac{\partial\varphi}{\partial r}\right)_{r=a} = \operatorname{div}_s\left(\varepsilon \mathbf{v}_t\right) \tag{95.7}$$

where $\varkappa\left(\frac{\partial\varphi}{\partial r}\right)_{r=a}$ is the normal component of the current density at the surface of the particle. The relation (95.7) is the direct generalization of formula (69.7) for the case of the transfer of ions.

The velocity distribution (Figure 74) and the pressure distribution in the liquid can be presented in the form (70.28) to (70.30).

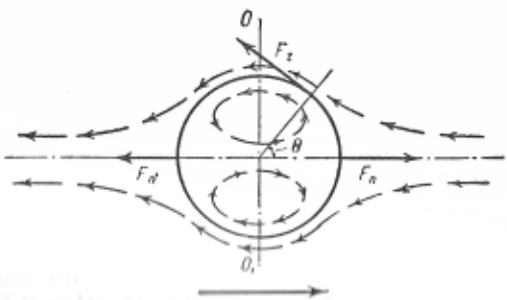

Figure 74. Motion of a positively charged particle in an electric field.

Substitution of the value of v_t, derived in a manner analogous to (73.10), into the law of conservation of charge (95.7) yields:

$$\varkappa\left(\frac{\partial\varphi}{\partial r}\right)_{r=a}=\frac{2\varepsilon v_0\cos\theta}{a}. \tag{95.8}$$

The solution of the Laplace equation satisfying conditions (95.6) and (95.8) has the form

$$\varphi=\left[r+\left(\frac{1}{2}-\frac{\varepsilon v_0}{\varkappa Ea}\right)\frac{a^3}{r^2}\right]E\cos\theta, \tag{95.9}$$

which, for $v_0 = 0$, evidently becomes the usual potential distribution near a spherical, nonconducting particle.

Substituting the values for the velocity components v_r and v_θ and the pressure p from (70.28) to (70.30) into the general expression for the components of the viscous stress tensor and introducing the expressions thereby derived for p_{rr} and $p_{r\theta}$ into (95.4), we obtain:

$$\int\int(p_{rr}\cos\theta-p_{r\theta}\sin\theta)\sin\theta\,d\theta\,d\varphi\cdot a^2=-2b_2=0.$$

from which it follows that $b_2=0$. The constants b_1 and b_3 can on the other hand be determined from boundary conditions (95.1) and (95.3). Elementary calculations yield:

$$U=\frac{2}{3}v_0=\frac{2}{3}\frac{\varepsilon d\,(E_t)_{r=a}}{\mu}. \tag{95.10}$$

Also, from equation (95.9), we find that, for r = a:

$$E_t=\left(\frac{3}{2}-\frac{v_0\varepsilon}{\varkappa Ea}\right)E. \tag{95.11}$$

Thus, by substituting this value for E_t into (95.10), we derive the expression

$$v_0=\frac{3}{2}\frac{\varepsilon Ed}{\mu}\cdot\frac{1}{1+\frac{\varepsilon^2 d}{\varkappa\mu a}} \tag{95.12}$$

for the slippage velocity at the surface. The velocity of electrophoretic motion, therefore, can be put into the final form

$$U=\frac{\varepsilon Ed}{\mu+\frac{\varepsilon^2}{\varkappa}\frac{d}{a}}. \tag{95.13}$$

Equation (95.13) determines the velocity of motion of the particle as a function of the magnitude of the applied field E, the charge ϵ of the mobile portion of the double layer and its effective thickness d, the rádius a of the particle, and the liquid properties — viscosity μ and conductivity $\varkappa$.

It is immediately clear from this formula that one constant, $\zeta = \epsilon d$, is not sufficient to describe the properties of the double layer, for, depending upon the magnitude of $\frac{\epsilon^2}{\varkappa\mu}\frac{d}{a}$, expression (95.13) can be written in either one of two limiting formulas:

$$U = \frac{\varepsilon d E}{\mu}; \quad \frac{\varepsilon^2}{\varkappa\mu}\cdot\frac{d}{a} \ll 1, \tag{95.14}$$

$$U = \frac{a\varkappa E}{\varepsilon}; \quad \frac{\varepsilon^2}{\varkappa\mu}\cdot\frac{d}{a} \gg 1. \tag{95.15}$$

Thus, the velocity of electrophoretic motion, at small ϵ, is proportional to ϵ, while, at large ϵ, it is inversely proportional to it and, as a function of ϵ, passes through a maximum at

$$\varepsilon = \varepsilon_{\max} = \sqrt{\frac{\varkappa a\mu}{d}}. \tag{95.16}$$

Equation (95.14) was first derived by M. von Smoluchowski [3], who also pointed out the need to introduce into the formula corrections for convective conductivity, which becomes significant in cases where electrophoresis occurs in a poorly conducting medium, without, however, making the necessary computations.

It is not difficult to see that (95.14) is obtained as a particular case of (95.13) when the correction for convective conductivity can be disregarded. Indeed, the appearance of the second term in the denominator of this expression relates to the convective transfer of ions along the surface of the drop. Let us characterize surface conductivity by the quantity $\varkappa_s$, determined, by analogy with the usual conductivity, from the expression

$$-\varkappa_s \operatorname{grad}_s \varphi = \mathbf{j}_s = \varepsilon \mathbf{v}_t. \tag{95.17}$$

Taking into account the fact that the magnitude of the potential gradient along the surface is $|\operatorname{grad}_s \varphi| = \frac{1}{a}\frac{\partial\varphi}{\partial\theta}$, and $|\mathbf{v}_t| = v_0 \sin\theta$, and utilizing expressions (95.9) and (95.13), we obtain:

$$\frac{1}{a}\frac{\partial\varphi}{\partial\theta} = \frac{3}{2}\frac{\mu E \sin\theta}{\mu + \frac{\varepsilon^2}{\varkappa}\cdot\frac{d}{a}} = \frac{3}{2}\frac{\mu}{\varepsilon d} U \sin\theta,$$

whence

$$\varkappa_s = \frac{|\varepsilon \mathbf{v}_t|}{|\operatorname{grad}_s \varphi|} = \frac{\varepsilon v_0 \sin\theta}{\frac{3}{2} U \frac{\mu}{\varepsilon d}\sin\theta} = \frac{\varepsilon^2 d}{\mu}. \tag{95.18}$$

Therefore

$$\frac{\varepsilon^2 d}{\varkappa \mu a} = \frac{\varepsilon^2 d}{\mu a} \cdot \frac{\partial \varphi}{\partial \theta} a : \varkappa \frac{1}{a} \frac{\partial \varphi}{\partial \theta} \cdot a^2$$

represents, to an order of magnitude, the ratio of the surface convective current, $j_{sur} = \varkappa_s \frac{1}{a} \frac{\partial \varphi}{\partial \theta} a$, to the current in the volume, $j_{vol} = \frac{\varkappa}{a} \frac{\partial \varphi}{\partial \theta} a^2$, of a conductor with a cross section equal to the area of the particle. This ratio is usually small, and the term $\frac{\epsilon^2 d}{\varkappa a}$ in the denominator of (95.13) may be neglected. Conversely, in weakly conducting solutions, the convective current predominates over the current in the volume, and formula (95.13) reduces to (95.15). Thus U, as a function of ϵ, should pass through a maximum, a conclusion which unfortunately cannot be verified from available experimental data.

Electrophoresis is used in actual practice to determine the charge ϵ of the mobile portion of the double layer or, what amounts to the same thing, the ζ-potential of the particle.

It should also be noted that many authors have developed a theory of surface conductivity, especially Bikerman [4] and Hermans [5]. Bikerman pointed out that, in addition to convective surface conductivity, it is necessary to consider the surface electrical conductivity, which is related to the presence of an excess of ions adsorbed on the particle surface. Thus, if $\epsilon = 0$ but if equal amounts of adsorbed cations and anions are present on the surface, the surface electrical conductivity will evidently be equal to $F(U_c + U_a) \cdot \Gamma$, where Γ is the amount of adsorbed material in equivalents per unit area, and U_c and U_a are the mobilities of the cations and anions, respectively, in the surface layer. In the case of motion near a solid wall, this effect should be of the same order of magnitude as the convective effect. Indeed, the ratio $\frac{\epsilon^2 d}{\mu} : F(U_c + U_a) \cdot \Gamma$ is of the order of $\zeta : \frac{e_0}{Dr_0}$, where e_0 and r_0 are the charge and radius of the ion respectively, D is the dielectric constant of the medium, and $\zeta : \frac{e_0}{Dr_0} \approx 1$. However, it is difficult to accept the method of calculation adopted by Bikerman, who, in computing the total surface conductivity, simply added the convective and conductive terms. The error in this procedure becomes clear as soon as one examines the case of a surface layer containing ions of only one sign, cations, for example. The amount of electricity carried by the charges in the surface layer in a field of unit intensity, according to Bikerman (but with our notation), should then be equal to $\int_0^\infty \epsilon_y (U_c + v_y)\, dy$, where ϵ_y and v_y are, respectively, the charge density and the velocity of the liquid at a distance y from the wall. It is evident, however, that in reality, when the distances between ions of the same sign are small on the average

compared with the distances of the ions from the wall, the liquid medium should move together with the ions as a unit, and that the quantity of electricity transported should equal $\int_0^\infty \epsilon_y v_y dy$, or, for a linear potential distribution, $\frac{\epsilon^2 d}{\mu}$. In the opposite case, i.e., when the distances between the ions are large compared to the distances of the ions from the wall, the amount of electricity transferred should be equal to $\int_0^\infty \epsilon_y U_{cy} dy$, where U_{cy}, the mobility of the cation, is slightly changed by the proximity of the wall. In the general case, the surface conductivity should lie between these values, rather than be equal to their sum as Bikerman assumes. The equations set forth in the present study account for only the convective term because these equations are necessary for comparison with the equations of electrocapillary motion, where, as will be shown later, convective conductivity exceeds the electrical conductivity by several orders of magnitude.

In his investigation, Hermans considers polarization of a double layer by an applied electric field with, however, an incorrect boundary condition for the charge density. In other words, he sets the change in the surface charge density of the particle under the action of an external field equal to zero, whereas the actual boundary condition requires that the normal component of the current be equal to zero. As for the charge density, computation shows that its change is by no means equal to zero on the surface, form which it follows that the conclusions of this study are erroneous.

In the preceding, we have confined our discussion to an examination of electrophoretic motion of solid, spherical, nonconducting particles whose dimensions are large compared to the effective thickness of the double layer. In actual practice, however, electrophoresis involves particles which may not satisfy all these conditions. Electrophoresis of metal particles is examined separately in the next section.

Strictly speaking, colloidal particles probably cannot be expected to be exactly spherical in shape. An additional factor of the order of unity which takes into account the deviation of the particle shape from the spherical should therefore be introduced into formula (95.13). Unfortunately, the computation of that factor for the complex geometrical shape of an actual particle appears to be impossible from a practical point of view, and this fact should be borne in mind whenever one evaluates those studies in which the electrophoretic velocity of extremely small particles ($a \ll d$) was determined. Calculations [6] have shown that, for $a \ll d$, the velocity of the motion is less than what is predicted by equation (95.14) by a factor whose limiting value is 2/3, and that the computation of the electrophoretic velocity of small particles is beset with many serious mathematical difficulties that often lead to a series which does not have a well-defined convergence [7].

Considering the fact that all changes in the formula for electrophoretic velocity involve only the numerical coefficient, which is difficult to calculate in most cases, we have decided to omit the detailed analysis.

96. ELECTROPHORESIS OF IDEALLY POLARIZABLE METAL PARTICLES. CALCULATION OF FORCES FOR THE CASE OF A DIFFUSE DOUBLE LAYER

So far, we have examined the electrophoresis of nonconducting particles. Let us now pass to the electrophoresis of metal particles and let us first find the forces that act on a spherical, metallic particle in an electrolytic solution in the presence of an electric field. We shall start by assuming that the particle is ideally polarizable, i.e., that the potential differences at the metal-solution interface are such that there occurs neither a discharge of ions of the solution nor the formation of new ions [8]. Under these conditions, the normal component of current at the surface of the particle, and, therefore, the normal component of the field in the solution outside the double layer, becomes zero, which means that the distribution of the lines of force outside the double layer is the same as in the case of a nonconducting particle.

Let us then calculate for the case of a diffuse double layer the magnitude of the force $(F_t)_y$ acting at a distance y from the metal-solution interface. We shall limit ourselves to a system with a plane interface at $y = 0$ (i.e., a sufficiently large particle whose curvature may be neglected), since the extension from a plane to a spherical particle will not add anything conceptually new. For a plane interface, the field intensity in the electrolyte outside the double layer can be considered constant. As before, let us designate by E_t the field strength in a direction parallel to the surface of the metal at a distance which is large compared to the thickness of the double layer. Also we suppose that the positive direction of the y axis is into the solution perpendicular to the surface of the metal, and that $\varphi = 0$ at $x = 0$ and for a sufficiently large y. Then, outside the double layer, we have $\varphi = -E_t x$.

In the presence of an external electric field, the equilibrium in the double layer is destroyed, and an electric current flows through it. On the surface of an ideally polarizable particle, however, the normal component of current is zero. The equation of continuity for the current is

$$\frac{\partial j_x}{\partial x} + \frac{\partial j_y}{\partial y} = 0 \tag{96.1}$$

and, since all gradients parallel to the wall are small compared to the gradients in the perpendicular direction,

$$\frac{\partial j_y}{\partial y} = 0, \quad \text{or} \quad j_y = \text{const} = 0.$$

Therefore, for a sufficiently large particle whose curvature can be neglected, the equilibrium may be considered as undisturbed, which means that the equation for the diffuse double layer (for a monovalent electrolyte) will take the form

$$\frac{D}{4\pi}\frac{\partial^2\varphi}{\partial y^2} = -(Fc_0)\left\{e^{-\frac{(\varphi+E_t x)F}{RT}} - e^{\frac{(\varphi+E_t x)F}{RT}}\right\}, \tag{96.2}$$

where c_0 is the concentration of the solution.

As in equation (96.1), we have, on account of their smallness, neglected derivatives parallel to the wall. The electrical force acting in a direction parallel to the surface of the metal on a volume element of the diffuse double layer lying between y and y + dy, and whose base is 1 cm², equals $\rho(y)\,(E_t)_y dy$, where $(E_t)_y$ is the tangential component of the field and $\rho(y)$ is the charge density at a distance y from the interface, so that

$$(E_t)_y\,\rho(y)\,dy = \frac{\partial\varphi}{\partial x}\cdot\frac{D}{4\pi}\frac{\partial^2\varphi}{\partial y^2}\,dy.$$

In addition, in a polarized, diffuse double layer, a gradient of osmotic pressure also exists (since the ion concentration varies from point to point); this gives a ponderomotive force equal to $-\frac{\partial p(y)}{\partial x}dy$, where p(y) is the osmotic pressure at a distance y from the interface. Thus the resultant ponderomotive force $(F_t)_y dy$ is

$$(F_t)_y\,dy = \left\{\frac{D}{4\pi}\frac{\partial\varphi}{\partial x}\cdot\frac{\partial^2\varphi}{\partial y^2} - \frac{\partial p(y)}{\partial x}\right\}dy. \tag{96.3}$$

Let us designate by $(c_c)_y$ and $(c_a)_y$ the concentration of cations and anions, respectively, at a distance y from the interface. Then

$$p(y) = \{(c_c)_y + (c_a)_y\}\,RT = c_0RT\left\{e^{-\frac{(\varphi+E_t x)F}{RT}} + e^{\frac{(\varphi+E_t x)F}{RT}}\right\}.$$

Integrating equation (96.2) from y to ∞, we obtain:

$$\frac{D}{8\pi}\left(\frac{\partial\varphi}{\partial y}\right)^2 = c_0RT\left\{e^{-\frac{(\varphi+E_t x)F}{RT}} + e^{\frac{(\varphi+E_t x)F}{RT}} - 2\right\} = p(y) - p_\infty, \tag{96.4}$$

which can be combined with equations (96.2) and (96.3) to yield:

$$\begin{aligned}(F_t)_y = &-c_0F\left\{e^{-\frac{(\varphi+E_t x)F}{RT}} - e^{\frac{(\varphi+E_t x)F}{RT}}\right\}\left(\frac{\partial\varphi}{\partial x}\right) + \\ &+ c_0F\left\{e^{-\frac{(\varphi+E_t x)F}{RT}} - e^{\frac{(\varphi+E_t x)F}{RT}}\right\}\left(\frac{\partial\varphi}{\partial x} + E_t\right) = E_t\rho(y).\end{aligned} \tag{96.5}$$

Thus, by taking the osmotic pressure gradient into account, we arrive not only at the same expression for the ponderomotive force in the double layer of the metal particle as in the case of a non-conducting particle, but we also obtain the same dependence on

distance as determined by the quantity $\rho(y)$.* The difference between the two cases boils down to the fact that the force acting on the inner sheet of the double layer on the surface of the metal is equal to zero, or, more correctly, that the point at which it is applied is displaced by a distance of the same order of magnitude as the particle radius. The possibility of utilizing equation (96.5) for a determination of the ponderomotive force in a double layer of arbitrary structure or in the presence of specific adsorption forces has not yet been clarified. In the most general case, therefore, we are limited to the method of Section 99, which is based on the Lippmann-Helmholtz equation.

We shall now show that the terms $\frac{D}{4\pi}\cdot\frac{\partial^2\varphi}{\partial y^2}\frac{\partial\varphi}{\partial x}dy$ and $\frac{\partial p(y)}{\partial x}dy$ in equation (96.3) are of comparable magnitude. Indeed,

$$\int_0^\infty \frac{D}{4\pi}\frac{\partial^2\varphi}{\partial y^2}\frac{\partial\varphi}{\partial x}dy = \frac{D}{4\pi}\left(\frac{\partial\varphi}{\partial y}\cdot\frac{\partial\varphi}{\partial x}\right)\Bigg|_0^\infty - \frac{D}{8\pi}\int_0^\infty \frac{\partial}{\partial x}\left(\frac{\partial\varphi}{\partial y}\right)^2 dy = -\int_0^\infty \frac{\partial p(y)}{\partial x}dy$$

---

* In an unpolarized, diffuse double layer, the excess lateral pressure on an element of the surface layer of thickness dy, whose integral over the entire surface layer gives the magnitude of the decrease in surface tension, is equal to the sum of the excess osmotic pressure $[p(y) - p_\infty]$ dy of ions in the double layer and the Maxwell pressure $\frac{D}{8\pi}\left(\frac{\partial\varphi}{\partial y}\right)^2$ dy. The terms in this sum are equal to each other. However, if we were to try to find the force $(F_t)_y dy$ from the relation

$$(F_t)_y\,dy = -\frac{\partial}{\partial x}\left\{\frac{D}{8\pi}\left(\frac{\partial\varphi}{\partial y}\right)^2 + [p(y) - p_\infty]\right\}dy, \qquad \text{(I)}$$

we would arrive at an incorrect result. The reason for this can be traced back to the fact that, in expressing the electric portion of the ponderomotive force in the double layer by means of the components of the Maxwell stress tensor, not only the T_{xx} components, but the T_{xy} components as well must be considered. The latter are absent in an unpolarized double layer. In this case, by neglecting the term that contains $\frac{\partial\varphi}{\partial x}\Big)^2$ in the expression for T_{xx}, we can arrive at the correct expression for the electric portion of the ponderomotive force, as follows:

$$\left(\frac{\partial T_{xx}}{\partial x} + \frac{\partial T_{xy}}{\partial y}\right) = \frac{\partial}{\partial x}\left\{-\frac{D}{8\pi}\left(\frac{\partial\varphi}{\partial y}\right)^2\right\} + \frac{\partial}{\partial y}\left(\frac{D}{4\pi}\frac{\partial\varphi}{\partial x}\cdot\frac{\partial\varphi}{\partial y}\right) = \frac{D}{4\pi}\frac{\partial^2\varphi}{\partial y^2}\frac{\partial\varphi}{\partial x}. \qquad \text{(II)}$$

The quantity T_{xy} becomes zero at both boundaries of the double layer, and, as a consequence, integration of the incorrect relation (I) does lead to a correct result.

and, according to equations (96.2) and (96.4),

$$\int_0^\infty \frac{D}{4\pi}\frac{\partial^2\varphi}{\partial y^2}\cdot\frac{\partial\varphi}{\partial x}\,dy = -\int_0^\infty \frac{\partial p(y)}{\partial x}\,dy = -\frac{1}{2}E_t\varepsilon,$$

where, as before, ϵ is the charge on the inner sheet of the double layer. The ratio of the electric component of the ponderomotive force to its osmotic component is then

$$\frac{D}{4\pi}\frac{\partial^2\varphi}{\partial y^2}\cdot\frac{\partial\varphi}{\partial x} : -\frac{\partial p(y)}{\partial x} = -\left(\frac{\partial\varphi}{\partial x}\right):\left(\frac{\partial\varphi}{\partial x}+E_t\right). \tag{96.6}$$

At relatively large distances from the particle, this becomes infinite, and the ponderomotive force is consequently determined solely by its electrical component. On the contrary, at sufficiently small distances, this ratio becomes zero, which means that the ponderomotive effect depends entirely on the osmotic term.

97. ELECTROPHORESIS OF IDEALLY POLARIZABLE METAL PARTICLES. CALCULATION OF FORCES FOR THE CASE OF A HELMHOLTZ DOUBLE LAYER

Let us assume now that the double layer has a Helmholtz structure, i.e., that the centers of gravity of the ions forming the outer sheet of the double layer lie on the surface of a sphere of radius a + d, which is concentric with the particle surface. It is usually postulated that the outer sheet of a Helmholtz double layer is rigidly bound to the surface of the metal. One could suppose, however, that there could exist a layer of adsorbed molecules on the surface of the metal which would act as a dielectric in the double layer, keeping the ions of the outer sheet at a constant distance from the surface of the metal in such a way that these ions would retain their mobility. Regardless of the soundness of such an assumption, we shall use here the simple Helmholtz model of the double layer in order to investigate the electrokinetic behavior of metal particles, since such a layer enables us to illustrate best the relations under discussion.

Under our assumptions, the distribution of the lines of force for a positively charged particle is illustrated in Figure 75. The direction of the x-axis has been taken parallel to the lines of force at a great distance from the particle. Let us designate by E the field intensity far from the particle, by r the distance measured from the center of the sphere, and by θ the angle between the radius vector and the x-axis ($0 \le \theta \le \pi$). Let us also choose our zero of potential in the solution at $r = a + d$ and $\theta = \frac{\pi}{2}$. Then

for $r \ge a + d$ $$\varphi = -E\left\{r + \frac{1}{2}\frac{(a+d)^3}{r^2}\right\}\cos\theta, \tag{97.1}$$

so that, at r = a + d

$$\varphi = -\frac{3}{2} E (a+d) \cos\theta. \tag{97.2}$$

Inside the metal and on its surface, i.e., for $r \leq a$,

$$\varphi = \varphi_0 \qquad (\varphi_0 \text{ is a constant}). \tag{97.3}$$

The solution of the Laplace equation satisfying boundary conditions (97.2) and (97.3) has the form

$$\varphi = \varphi_0 \left(\frac{a+d}{r} - 1\right) \frac{a}{d} - \frac{3}{2} \frac{E \cos\theta}{1 - \left(\frac{a}{a+d}\right)^3} \left(r - \frac{a^3}{r^2}\right). \tag{97.4}$$

The quantities which characterize the double layer and the forces acting on it can then be determined with the aid of relations (97.1) to (97.4).

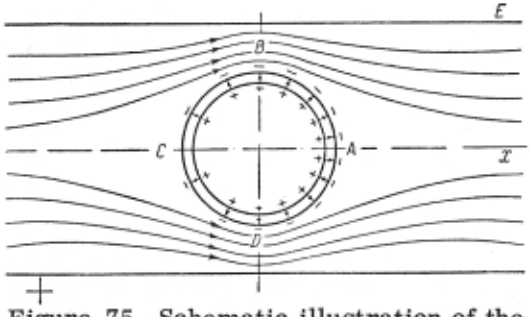

Figure 75. Schematic illustration of the double layer of an ideally polarizable metal particle in an external electric field.
The arrows show the direction of the field lines.

Let us next introduce the following notation: $\Delta\varphi$ as the jump in potential between the metal and the solution in the double layer, ϵ as the charge per unit area of the inner sheet of the double layer, ϵ' as the charge per unit area of the outer sheet, E_t as the field intensity tangential to the double layer, considering E_t positive when it forms an acute angle with the x axis, E_{n1} as the field component normal to the surface at the boundaries of the double layer and directed into it, and E_{n2} as the same directed outward from the double layer. In order now to compute the forces we consider a section of the double layer consisting of a surface element of the inner sheet, dS, and a surface element of the outer sheet, $\frac{(a+d)^2}{a^2}$ dS, included in the same

solid angle. We designate by $F_t dS$ the tangential force exerted on this element, and by $F_n dS$ the normal force, where the positive direction of F_t is the same as the positive direction of E_t, while the positive direction of F_n is from the center of the sphere (see Figure 74).

In determining the value of each of these quantities, we shall assume that $d \ll a$ and also limit all final expressions to the first term of the series expansion in powers of $\frac{d}{a}$. To derive these results however, it becomes necessary to determine the intermediate values of E_n and ϵ up to an accuracy one order of magnitude higher.

It follows from equations (97.1) to (97.4) that:

$$\Delta\varphi = \varphi_0 + \frac{3}{2} Ea \cos\theta. \tag{97.5}$$

The dependence of $\Delta\varphi$ on θ corresponds (for $\Delta\varphi > 0$) to the distribution of the lines of force in the double layer (schematically presented in Figure 75), which indicates the polarization of the double layer under the influence of an external field.

Furthermore,

$$(E_{n_1})_{r=a} = -\left(\frac{\partial\varphi}{\partial r}\right)_{r=a} = \varphi_0\left(\frac{1}{d}+\frac{1}{a}\right) + \frac{3}{2} Ea\cos\theta\left(\frac{1}{d}+\frac{2}{a}\right), \tag{97.6}$$

$$(E_{n_2})_{r=a+d} = \left(\frac{\partial\varphi}{\partial r}\right)_{r=a+d} = -\varphi_0\left(\frac{1}{d}-\frac{1}{a}\right) - \frac{3}{2} Ea\cos\theta\cdot\frac{1}{d}, \tag{97.7}$$

where the values of $\frac{\partial\varphi}{\partial r}$ are determined from equation (97.4),

$$(E_{n_3})_{r=a} = (E_{n_3})_{r=a+d} = 0, \tag{97.8}$$

$$(E_t)_{r=a+d} = \frac{1}{a+d}\cdot\left(\frac{\partial\varphi}{\partial\theta}\right)_{r=a+d} = \frac{3}{2} E\sin\theta, \tag{97.9}$$

$$\begin{aligned}\varepsilon &= \frac{D}{4\pi}\left\{(E_{n_1})_{r=a} + (E_{n_2})_{r=a}\right\} = \\ &= \frac{D}{4\pi}\left\{\varphi_0\left(\frac{1}{d}+\frac{1}{a}\right) + \frac{3}{2} Ea\cos\theta\left(\frac{1}{d}+\frac{2}{a}\right)\right\},\end{aligned} \tag{97.10}$$

$$\begin{aligned}\left(\frac{a+d}{a}\right)^2\varepsilon' &= \frac{D}{4\pi}\left\{(E_{n_1})_{r=a+d} + (E_{n_2})_{r=a+d}\right\}\left(\frac{a+d}{a}\right)^2 = \\ &= -\frac{D}{4\pi}\left\{\varphi_0\left(\frac{1}{d}+\frac{1}{a}\right) + \frac{3}{2} Ea\cos\theta\left(\frac{1}{d}+\frac{2}{a}\right)\right\} = -\varepsilon,\end{aligned} \tag{97.11}$$

$$(E_t)_{r=a} = 0, \tag{97.12}$$

Here D is the dielectric constant of the medium in the double layer.

The quantities F_t and F_n can be easily obtained from equations (97.6), (97.10), and (97.12). Limiting our final expression to only the first term of the series expansion, we find that

$$F_t = (E_t)_{r=a}\,\varepsilon + (E_t)_{r=a+d}\,\varepsilon'\left(\frac{a+d}{a}\right)^2 = -(E_t)_{r=a+d}\,\varepsilon \qquad (97.13)$$

and, consequently,

$$F_t = -\frac{D}{4\pi d}\left\{\varphi_0 + \frac{3}{2}Ea\cos\theta\right\}\frac{3}{2}E\sin\theta = \frac{1}{a}C\,\Delta\varphi\frac{\partial\varphi}{\partial\theta} = \frac{1}{a}\frac{\partial\,\Delta\sigma}{\partial\theta}, \qquad (97.14)$$

where $C = \frac{D}{4\pi d}$ is the capacitance of the double layer per unit area for $d \ll a$, and $\Delta\sigma = \frac{C(\Delta\varphi)^2}{2}$. The quantity $\Delta\sigma$, in the case of a Helmholtz double layer, expresses the lowering of the interfacial tension due to the surface charges. The direction of the force F_t is shown in Figure 74.

We have, for the normal component,

$$F_n = -\frac{1}{2}\left\{(E_{n_1})_{r=a} - (E_{n_2})_{r=a}\right\}\varepsilon + \frac{1}{2}\left\{(E_{n_1})_{r=a+d} - (E_{n_2})_{r=a+d}\right\}\cdot\varepsilon'\left(\frac{a+d}{a}\right)^2 = -\frac{C(\Delta\varphi)^2}{a} = -\frac{2\,\Delta\sigma}{a}. \qquad (97.15)$$

It is seen from equation (97.15) that the absolute value of F_n is greater in the right hemisphere than in the left hemisphere. The directions and the relative values of the force F_n for $\theta = 0$ and $\theta = \pi$ are shown in Figure 74.

The resulting forces acting on the particle as a whole can be derived from equations (97.14) and (97.15). The force F_t has a component parallel to the x axis equal to $F_t \sin\theta$, so that the tangential force acting on the element of the double layer between the angles θ and $\theta + d\theta$ is

$$2\pi a^2 F_t \sin\theta\sin\theta\,d\theta = 2\pi a\sin^2\theta\,\frac{\partial\,\Delta\sigma}{\partial\theta}\,d\theta = -3\pi a^2 EC\sin^3\theta\left(\varphi_0 + \frac{3}{2}Ea\cos\theta\right)d\theta,$$

which can be integrated over the entire surface to yield:

$$-\int_0^\pi 3\pi a^2 EC\sin^3\theta\left(\varphi_0 + \frac{3}{2}Ea\cos\theta\right)d\theta = -4\pi a^2\cdot C\varphi_0 E = -4\pi a^2\varepsilon_0 E = -eE, \qquad (97.16)$$

where $\epsilon_0 = C\varphi_0$ is the charge density on the surface of the metal in the absence of an external field, and $e = 4\pi a^2\epsilon_0$ is the total charge on the metal surface. Thus, the forces acting on the double layer in a direction tangential to the surface of the metal give rise to a component which is parallel to the field intensity and equal in magnitude to the force acting on a particle with a free charge e, but opposite in sign since this force originates from the charges on the outer sheet of the double layer.

On the other hand, the component of the force F_n parallel to the x axis is $F_n \cos\theta$, which when integrated over the entire surface of the particle reduces to:

$$-\int_0^\pi 2\pi a^2 F_n \cos\theta \sin\theta \, d\theta = 4\pi a \int_0^\pi \Delta\sigma \sin\theta \cos\theta \, d\theta = \\ = 4\pi a^2 C\varphi_0 E = eE. \tag{97.17}$$

Thus, the sum of the tangential and normal forces acting over the entire double layer is equal to zero. This should have been expected. The results are different, however, if instead of the surface as a whole only a portion of the particle, for example the spherical segment which is included within the angles θ and $\pi - \theta$, is considered. The sum of the forces parallel to the x axis is evidently

$$2\pi a^2 \int_\theta^{\pi-\theta} (F_t \sin^2\theta - F_n \sin\theta \cos\theta) \, d\theta = \\ = 2\pi a \int_\theta^{\pi-\theta} \left(\sin^2\theta \cdot \frac{\partial \Delta\sigma}{\partial\theta} + 2\Delta\sigma \sin\theta \cos\theta\right) d\theta = \\ = 2\pi a \, \Delta\sigma \sin^2\theta \Big|_\theta^{\pi-\theta} = \frac{3}{2} eE \cos\theta \sin^2\theta. \tag{97.18}$$

The expression vanishes at $\theta = 0$, in accordance with what has been said above, and passes through a maximum $\frac{eE}{\sqrt{3}}$ at $\cos^2\theta = \frac{1}{3}$. Since the force exerted on the surface of the particle, consisting of two spherical layers — one defined by the range of angles from 0 to θ, and the other, by the range from $\pi - \theta$ to π — is equal in magnitude and opposite in sign to the derived value, so-called Maxwellian stresses should appear in the solid metal particle under the action of these forces. These stresses are absent in the case of a nonconducting particle. In a liquid metal particle (see below), the same forces, applied at points separated by distances of the order of magnitude of the particle radius, should give rise to a motion far more intense than what is usually observed in electrokinetic phenomena. The derivation set forth here, based directly on a consideration of the electrical forces operating on the charges in the simplest model of a double layer, is somewhat involved and depends in addition on the specific assumptions concerning the structure of the double layer as set forth in the model. Nevertheless, it clearly shows the origin of the forces exerted on a metal particle.

Let us now consider the forces acting on an element of the particle's surface between the angles θ and $\theta + d\theta$. The resultant of all surface tensions acting on this portion of the surface is evidently directed along the x axis and is equal to

$$-\frac{\partial}{\partial\theta}(2\pi a\sigma\sin^2\theta)\,d\theta = -2\pi a\sin^2\theta\,\frac{\partial\sigma}{\partial\theta}\,d\theta - \\ -2\pi a^2\sin\theta\cos\theta\,\frac{2\sigma}{a}\,d\theta = (F_t\sin\theta - F_n\cos\theta)\,dS. \tag{97.19}$$

The first term in expression (97.19) gives the magnitude of the tangential forces projected onto the x axis, while the second gives the projection of the normal forces. During the integration over the entire surface of the sphere, the quantity $F_t \sin\theta$ does not change its sign, but the quantity $F_n \cos\theta$ has opposite signs in the two hemispheres separated by the plane O_1O (Figure 74). But, since the value of the surface tension (for $\epsilon > 0$) in the left hemisphere is greater than in the right hemisphere, the resultant of all the normal forces is positive and exactly cancels out the resultant of all the tangential forces, because, according to (97.19), we have that

$$\int_0^\pi F_n\cos\theta\,dS = \int_0^\pi F_t\sin\theta\,dS.$$

In the absence of a field, i.e., for σ = const, each of these integrals vanishes and all the forces reduce to a uniform compression $2\sigma_0/a$. Thus, detailed examination of the forces acting on the surface of an ideally polarizable particle shows that, despite its metallic nature, forces are generated in every portion of its surface which set the solution into motion (we assume the particle to be motionless). The magnitude of these forces is no different from the forces exerted on the surface of a nonconducting particle. An ideally polarizable metal particle must therefore pass into the same electrophoretic motion as a dielectric particle, with its velocity given by equation (95.13), which is general for nonconducting and for ideally polarizable, conducting particles. This conclusion is in full agreement with data obtained by N. A. Balashova and A. N. Frumkin [9] in a study of the electrophoresis of metal sols known to be free of oxide films (platinum sols, for example), and other substances.

The problem of the electrophoresis of metal particles has been considered theoretically by Henry [6], who arrived at the erroneous result that this phenomenon cannot be present under such circumstances. This erroneous conclusion came about because the author failed to account for the polarizing properties of metal particles in solutions.

98. ELECTROCAPILLARY MOTION OF MERCURY DROPS IN AN ELECTRIC FIELD

The motion of mercury drops under the influence of an electric current was first described in detail by Christiansen [10], who

showed that, when a current passes through a drop of mercury placed in an electrolytic solution, the potential difference across the mercury-solution interface changes, inducing changes in the boundary layer. If the mercury in the solution is initially positively charged, the interfacial tension increases at the point where the current enters the drop (the negative pole of the drop) and decreases at the point of exit (the positive pole) thereby causing the mercury to move from the positive to the negative pole along the surface and in the opposite direction within the drop itself. The surface motion drags along the adjacent layers of the solution, and this results in a reactive movement of the drop as a whole along the lines of current. This motion, named electrocapillary motion by Christiansen, can be observed, for example, in the deviation from the vertical of mercury drops falling in an electric field. The velocity of the motion is very great, considerably exceeding that of the ordinary electrokinetic motion, but as the solution is diluted, the velocity of the drop in the field, for the same potential gradient, decreases. Besides the motion of the drop as a whole, Christiansen described the changes in shape which it undergoes. The curvature decreases at the positive pole and increases at the negative pole, so that the drop moves with the blunt end forward.

It follows from the theory of electrocapillarity that the drop will remain motionless in the field if its initial potential corresponds to the maximum on the electrocapillary curve, i.e., to the point of zero charge. This conclusion was confirmed by Frumkin [11] for falling drops, and by Bodforss [12] and Craxford [13] for drops at rest on a glass surface.

The motion of mercury drops in an electric field was first investigated throetically by Craxford, Gatty, and McKay [14], who concluded that the electrophoretic force acting on the drop is equal to the electric field intensity multiplied by the charge of the inner sheet of the double layer, as measured by the usual electrocapillary methods. It is obvious, however, that the sum of the electric forces acting on a system whose total charge is zero cannot itself be different from zero, so that such a conclusion must be incorrect. These authors consider the motion of mercury drops under small potential gradients as a particular and, at the same time, the simplest instance of ordinary electrophoresis.

In addition to observations on the motion of relatively large drops, published data are available on the electrokinetic motion of mercury particles of colloidal dimensions (10^{-4} cm) in mercury sols in the presence of low concentrations of electrolytes. The velocities observed in such instances do not differ in order of magnitude from those common in electrokinetic motion.

N. A. Bakh [15] studied the potential difference occurring in a shower of mercury drops falling in a column of an electrolyte. This is an effect similar to the currents caused by the fall of solid particles in liquids, the theory of which has been given by Smoluchowski

[3]. The potential differences induced by mercury droplets falling in a normal KNO_3 solution are, however, about 10^5 times greater than those possible for solid particles, and the ratio, in the case of 10^{-5} N KNO_3, is approximately 10. Thus, the observed potential differences, especially in the case of highly conducting solutions, cannot be interpreted as ordinary electrokinetic effects. This phenomenon was explained as a reversal of the Christiansen effect. As the drop falls through the solution, the surface of the mercury, along with the charges of the double layer, is pulled toward the rear of the drop. Thus the charge density of the double layer on the forward part of the drop decreases, while it increases at the rear, which in turn leads to potential differences in the electrolyte between the ends of the drop and, hence, to induced currents.

Interest in electrocapillary motion increased markedly in connection with the problem of the maxima on the current-voltage curves for a mercury electrode (see Chapter X). In a study by A. N. Frumkin and B. P. Bruns [16], it was shown that the high values of the current observed at these maxima were due to the agitation of the solution by the electrocapillary motions of the mercury surface. The electrocapillary motions giving rise to these maxima were later studied in detail, both for the case of a mercury electrode with a constant surface area [17], and for the case of a dropping mercury electrode. The latter system was also investigated, in particular, by Antweiler and Stackelberg [18]. Antweiler considered that the motions of the mercury surface were electrokinetic, and that high velocities were attained because of the absence of strong friction, which exists on the surface of a solid body, and because of the mobility of the charges in the inner sheet of the double layer, which results from the high conductivity of mercury. In this case, and in contrast to the electrokinetic motion at a solid surface, the double layer at the mercury surface moves as a single unit. Antweiler's point of view is that the passage of current through the metal-solution interface is essential for the appearance of motion. This is especially stressed by Stackelberg [19], according to whom the motion described by Christiansen is related to the presence of dissolved oxygen in the solution. Thus, if in the case of an ideally polarizable drop the oxygen is completely removed, then the motion should cease.

T. A. Kryukova and B. N. Kabanov [20] drew attention to the motion which arises in a solution near the surface of the falling mercury drop and which is caused by the very process of dropping. They found such motions to be especially noticeable at relatively high concentrations of the electrolyte (higher than 0.1 N).

The papers cited above do not throw sufficient light on the questions concerning the influence of the electrolyte on the motion of the mercury surface, the hydrodynamic properties of this surface in conducting solutions, and the relationship between electrocapillary and electrokinetic motions. Whereas the majority of authors have

treated these two phenomena as completely independent, in the investigations conducted by Craxford et al., both were considered to be identical, despite the enormous differences in the observed velocities of motion. A. N. Frumkin and the author of this book developed a theory for the electrocapillary motion of mercury drops and established the relationship between this phenomenon and the electrokinetic motion of solid particles.

In Section 96 we examined the system of forces exerted on the surface of a metal particle immersed in an electrolytic solution in an electric field. A mercury drop is a particular case of a metal particle. The only difference between it and a solid particle is that the forces acting on the surface of a drop are balanced by viscous rather than by elastic forces.

99. MOTION OF LIQUID METAL DROPS IN AN ELECTRIC FIELD

Let us examine the motion of a liquid metal particle in a solution under the influence of an applied electric field. The conductivity of the metal particle may be considered infinitely high compared to that of the solution [21]. Let us also assume that the radius of the particle is large in comparison with the effective thickness of the double layer and suppose at first that the particle is ideally polarizable. This latter assumption implies that, in the given solution at a given potential on the surface of the particle, no discharge or formation of ions can occur and that no current can flow through the particle.

The electric field potential φ in the solution is determined by the Poisson equation

$$\Delta\varphi = -\frac{4\pi\rho}{D},$$

where ρ is the volumetric charge density and D is the dielectric constant of the medium.

The potential φ at a great distance from the particle coincides with that of the applied field E. It has a constant value, which we shall later select as the zero of potential, on the surface of the metal particle itself.

If the direction of the external field is assumed to be positive in the direction of the x axis, the potential at infinity is

$$\varphi \to Er\cos\theta. \tag{99.1}$$

while, on the surface of the particle, at r = a,

$$\varphi = 0. \tag{99.2}$$

Let us now introduce spherical coordinates with the origin at the center of the particle. The entire solution surrounding the particle may be subdivided into two regions: the region of the double layer where the charge density is not zero, and the region of the electrically neutral solution. If d is the effective thickness of the double layer, in the first region $r < a + d$, and in the second, $r > a + d$. Here, we assume that $a \gg d$.

Let us further suppose that the field gradient at the surface of the metal outside the double layer is small compared to the potential gradient in the double layer along the normal to the surface, and that the radius of the particle is sufficiently large so that the interfacial tension is not a function of the radius. With these assumptions, the state of the surface layer and, consequently, the surface tension σ at the metal-solution interface, are uniquely determined, for each point of the metal surface, by the potential difference between the metal and the solution $\Delta\varphi = \varphi_0 - \varphi_S$ (where φ_S is the value of the potential in the solution at the surface of the metal, but outside the double layer) or, since φ_0 = const, σ is determined by φ_S itself and is independent of the potential difference at the neighboring points. If $\Delta\varphi$ were constant, σ would also have a constant value, and no tangential forces would exist on the surface of the metal. In the case of a polarized particle, however, $\Delta\varphi$ and, hence, σ vary from point to point. The tangential force is $F_t = \operatorname{grad}\sigma$ and, since σ is a function of θ only and F_t is considered positive if the tangential force is in the direction of decreasing values of θ, then

$$F_t dS = -\frac{1}{a}\frac{\partial\sigma}{\partial\theta} dS. \tag{99.3}$$

It is known now that the surface tension is related to the jump in potential $\Delta\varphi$ at the mercury-solution interface and to the surface charge ϵ by the Lippmann-Helmholtz relation

$$\frac{\partial\sigma}{\partial\Delta\varphi} = -\varepsilon. \tag{99.4}$$

If the jump in potential $\Delta\varphi$ varies from point to point on the particle surface, the surface tension at any point on the surface, characterized by the angle θ, may be expressed in the form

$$\sigma(\theta) = \sigma_{\pi/2} + \int_{\pi/2}^{\theta} \frac{\partial\sigma}{\partial\Delta\varphi}\cdot\frac{\partial\Delta\varphi}{\partial\theta} d\theta = \sigma_{\pi/2} - \int_{\pi/2}^{\theta} \varepsilon\frac{\partial\Delta\varphi}{\partial\theta} d\theta,$$

where $\pi/2$ is the surface tension at the drop's equator.

We assume, in what follows, that the applied field is sufficiently weak to allow us to neglect all second order (quadratic) quantities. It is obvious then that ϵ will correspond to the density of the surface charge of the drop in the absence of a field — a charge which is not a

function of the angle θ and which can therefore be placed outside the integral sign. Thus,

$$\sigma = \sigma_{\pi/2} - \varepsilon \int_{\pi/2}^{\theta} \frac{\partial \Delta\varphi}{\partial\theta} d\theta = \sigma_{\pi/2} - \varepsilon \Delta\varphi. \tag{99.5}$$

The presence of varying surface tension leads to the appearance of normal $p_{rr}^{(\sigma)} = F_n$ and tangential $p_{r\theta}^{(\sigma)} = -F_t$ stresses, acting on the boundary of the metal-solution interface,

$$F_n = \frac{2\sigma}{a} = \frac{2\sigma_{\pi/2}}{a} - \frac{2\varepsilon\,\Delta\varphi}{a}, \tag{99.6}$$

$$F_t = \operatorname{grad}\sigma = -\varepsilon \operatorname{grad}_\theta \Delta\varphi = -\frac{\varepsilon}{a}\frac{\partial \Delta\varphi}{\partial\theta}. \tag{99.7}$$

The ratio in (99.6) differs from formula (97.15) only in that it contains the term $\frac{2\sigma_{\pi/2}}{a}$. It is absent in equation (97.15) because the latter represents the part of the force that is electrical in origin.

The derivation of the expressions for the forces exerted on the surface — based on an application of the thermodynamic Lippmann-Helmholtz formula — is more general than the derivations set forth in Sections 96 and 97. It is independent of any model regarding the structure of the double layer, and yet at the same time, it has the disadvantage that it can only lead to expressions for the total forces and not for their spatial distribution.

Since field intensities different from zero are applied to the liquid boundary, the liquid cannot remain at rest and must move. The velocity of this motion will then be such that viscous stresses will match the surface stresses described above.

In order to determine this motion, it is necessary, as may be seen from formulas (99.6) and (99.7), to find how the potential difference $\Delta\varphi$ in the double layer surrounding the particle depends on the polar angle θ, and to accomplish this, we must know the potential distribution in the outer sheet of the double layer (the sheet that faces the solution), since we have taken the value of the potential in the metal as zero. This potential distribution can be derived from a solution of the equation for the potential outside the double layer in the neutral solution

$$\Delta\varphi = 0 \tag{99.8}$$

with appropriate boundary conditions. In this way we do not need to consider specific models of the double layer.

The requirement that the potential must coincide with that of the applied field, i.e., equation (99.1), serves as the boundary condition at infinity. In order to formulate the boundary condition at the neutral solution-double layer interface, it is necessary, as shown below, to take into account the motion of the solution and the corresponding convective transfer of ions.

If, under the action of the applied field, the liquid surrounding the particle moves with a velocity v, the liquid motion in a direction tangential to the surface of the particle will lead to a convective ion flow.

Let ϵ be the charge per unit area of the mobile portion of the double layer. For liquid metal particles we assume that the entire double layer is mobile, so that ϵ represents the entire charge per unit area $\left(\epsilon = \int_0^\infty \rho(r)\,dr\right)$. Also let v_θ be the tangential component of the fluid velocity in the mobile portion of the double layer (more exactly, at the interface θ between the two liquids). Then the convective surface current flowing across the surface of the particle has a density of $j_s = \epsilon v_\theta$.

The tangential velocity varies from point to point on the surface of the particle, which means that the surface divergence of the convective current is not zero: $\mathrm{div}_s(\epsilon v_t) \neq 0$. In other words, the convective transfer of ions by the flowing liquid leads to a situation in which the ions leave the double layer in order to enter the region of neutral solution at some points of the surface, while at other points they enter the double layer from the outside (it follows from the assumption that the particle is ideally polarizable that the ions cannot lose their charge on the surface).

The law of conservation of charge requires now that condition (95.7) be fulfilled at the interface between the double layer and the electrically neutral solution. The required boundary condition is therefore

$$\varkappa \frac{\partial \varphi}{\partial r} = \mathrm{div}_s(\epsilon v_t). \tag{99.9}$$

Thus, it may be seen from (99.9) that, the hydrodynamic problem must first be solved, before the electrical problem can be tackled and that these two problems are inseparable. In particular, even though problems of this type cannot usually be solved exactly, the high degree of geometric symmetry in this case (a spherical drop a uniform external field) permits the construction of a solution under certain assumptions.

In formulating the hydrodynamic equations, we shall assume that the particle motion occurs at small Reynolds numbers $\mathrm{Re} = \frac{Ua}{\nu}$, where U is the velocity of the drop and ν is the kinematic viscosity of the solution. It is convenient, in what follows, to use a system of coordinates related to the drop in such a way that the drop is considered at rest, while the liquid is supposed to move relative to it with a velocity which is equal in value but opposite in direction to the actual motion of the drop proper. Taking the symmetry of the problem into account, let us then use the Navier-Stokes and continuity equations in spherical coordinates — equations (70.5) to (70.7).

The boundary conditions for v_r and v_θ at infinity are

$$v_r = -U\cos\theta, \qquad v_\theta = +U\sin\theta, \qquad \text{as} \quad r \to \infty, \tag{99.10}$$

where U is the velocity of liquid motion at infinity (velocity of the drop relative to the solution). The velocity of the inner liquid must remain finite at the center of the drop (the origin of the coordinates), while the normal velocity components of the exterior and interior liquids on the surface of the drop must vanish, i.e.,

$$v_r = 0, \qquad v_r' = 0, \qquad \text{at} \quad r = a, \tag{99.11}$$

Lastly, the tangential velocity component of both liquids must be continuous

$$v_\theta = v_\theta' \qquad \text{at} \quad r = a. \tag{99.12}$$

In addition, however, the condition of continuity for the normal and tangential components of the stress tensor must be fulfilled at the interface between the liquids, which means that if $p_{rr}^{(0)}$ and $p_{r\theta}^{(0)}$ are the normal and tangential components of the viscous stress tensor, we must require that at the interface

$$p_{rr}^{(0)} + p_{rr}^{(\sigma)} = p_{rr}', \tag{99.13}$$

$$p_{r\theta}^{(0)} + p_{r\theta}^{(\sigma)} = p_{r\theta}', \qquad \text{at} \quad r = a. \tag{99.14}$$

Now, in order to solve this system of hydrodynamic and electrodynamic equations with the indicated boundary conditions, we should also note that the electric field and the velocity of fluid flow far from the particle must be parallel to the x axis; i.e., conditions (99.1) and (99.10) must be obeyed. In a similar manner we shall assume that the field potential near the drop is a function of the external field and of the angle in such a manner that

$$\varphi = \alpha E r \cos\theta, \tag{99.15}$$

where α is an unknown constant whose value will be derived later in the course of the solution.

Let us also assume that the drop retains its spherical symmetry during its motion, so that the expressions for the radial and tangential components of velocity and the pressure, satisfying the hydrodynamic equations and condition (99.10) at infinity, may be written in the form of the first terms of an expansion in spherical harmonic functions, i.e., in the form of formulas (70.28) to (70.33). The five unknown constants — a_1, a_2, b_1, b_2, and b_3 — contained in these expressions must then be determined from boundary conditions. The

latter include the value of $\Delta\varphi$ as obtained from the solution of the electrical part of the problem.

We shall show next that, for a consistent choice of the constants, all the boundary conditions of the electrical and hydrodynamic problems can be satisfied and that in this fashion the complete solution can be found. This in turn will justify our original assumption about the form of the solution, which should be sought in the same fashion as was done for the similar problem of the motion of a drop in the presence of surface-active agents.

For the tangential component of the velocity on the surface of the drop, let us first write the expression

$$(v_\theta)_{r=a} = v_0 \sin\theta, \tag{99.16}$$

where v_0 is a new unknown constant which has to be determined. Then, for the surface divergence of the velocity entering into boundary condition (99.9), we have an expression analogous to (73.10)

$$\operatorname{div}_s(\varepsilon \mathbf{v}_t) = \frac{\varepsilon}{a\sin\theta}\left(\frac{\partial}{\partial\theta}(v_\theta \sin\theta)\right)_{r=a} = \frac{2\varepsilon v_0 \cos\theta}{a}.$$

If we substitute the above for $\operatorname{div}_s(\epsilon \mathbf{v}_t)$ into expression (99.9), we see that

$$\varkappa\left(\frac{\partial\varphi}{\partial r}\right)_{r=a} = \frac{2\varepsilon v_0 \cos\theta}{a}. \tag{99.17}$$

where we suppose that ϵ is constant along the surface and that the value of $\partial\varphi/\partial r$ is taken at $r = a$ and not at $r = a + d$. The first assumption follows from the postulate that all perturbations are small, and the second is due to the inequality $a \gg d$.

Solution of equation (99.8) for the potential satisfying boundary condition (99.17) gives

$$\varphi = \left[r + \left(\frac{1}{2} - \frac{\varepsilon v_0}{\varkappa E a}\right)\frac{a^3}{r^2}\right] E\cos\theta. \tag{99.18}$$

and therefore the value of the constant α in (99.15) is $\left(\frac{3}{2} - \frac{\epsilon v_0}{\varkappa E a}\right)$.

Thus, from a knowledge of the potential outside the double layer, we can obtain the expression

$$\Delta\varphi = -\varphi_{\text{met}} + \varphi_{r=a+d} = +\varphi_{r=a} = \left(\frac{3}{2} - \frac{v_0\varepsilon}{\varkappa E a}\right) E a \cos\theta \tag{99.19}$$

for the potential jump at the metal-solution interface.

Consequently, because of (99.6) and (99.7),

$$p_{rr}^{(\sigma)} = \frac{2\sigma_{n/2}}{a} - 2\varepsilon\left(\frac{3}{2} - \frac{v_0\varepsilon}{\varkappa E a}\right) E\cos\theta,$$

$$p_{r\theta}^{(\sigma)} = \left(\frac{3}{2} - \frac{v_0\varepsilon}{\varkappa E a}\right)\varepsilon E \sin\theta.$$

Similarly, from the stress distribution on the surface of the drop we can determine the constants with the aid of the boundary conditions for the hydrodynamic problem. By substituting the values of $p_{rr}^{(0)}$, $p_{r\theta}^{(0)}$, p_{rr}', and $p_{r\theta}'$ from expressions (70.9) into the boundary conditions (99.13) and (99.14), we have:

$$\cos\theta\left[-\left(\frac{3b_0\mu}{a^2}+\frac{6\mu b_1}{a^4}\right)+2\varepsilon E\left(\frac{3}{2}-\frac{v_0\varepsilon}{\varkappa Ea}\right)+6\mu' a_1 a\right]=0,$$

$$-\frac{3\mu b_1}{a^4}+\varepsilon E\left(\frac{3}{2}-\frac{v_0\varepsilon}{\varkappa Ea}\right)=-3\mu' a_1 a,$$

and by substituting the values of the velocities from expressions (70.28) to (70.33) into the boundary conditions (99.11) and (99.12), we obtain

$$\frac{b_2}{a}+\frac{b_1}{a^3}+b_3=0, \qquad a_1a^2+a_2=0,$$

$$v_0=\frac{b_1}{2a^3}-\frac{b_2}{2a}-b_3, \qquad -2a_1a^2-a_2=v_0.$$

Finally, from equation (99.10), we find that

$$b_3=-U.$$

The unknown quantities b_1, b_2, a_1, a_2, v_0, and U can be found from this system of equations, which may be solved by elementary transformations

$$b_2=0, \qquad \frac{b_1}{a^3}=U,$$

$$a_1a^2=-\frac{3}{2}U, \qquad a_2=\frac{3U}{2}, \tag{99.20}$$

$$v_0=\frac{3}{2}U=\frac{3}{2}\frac{\varepsilon Ea}{2\mu+3\mu'+\frac{\varepsilon^2}{\varkappa}},$$

$$U=\frac{\varepsilon Ea}{2\mu+3\mu'+\frac{\varepsilon^2}{\varkappa}}. \tag{99.21}$$

Thus, the velocity distribution in the flowing liquid has the form (in a coordinate system related to the drop)

$$v_r=U\left(\frac{a^3}{r^3}-1\right)\cos\theta, \tag{99.22}$$

$$v_\theta=U\left(\frac{a^3}{2r^3}+1\right)\sin\theta, \tag{99.23}$$

$$v_r'=\frac{3}{2}U\left(1-\frac{r^2}{a^2}\right)\cos\theta, \tag{99.24}$$

$$v_\theta'=\frac{3}{2}U\left(\frac{2r^2}{a^2}-1\right)\sin\theta, \tag{99.25}$$

and the potential distribution is given by the relation

$$\varphi = E\left[r + \left(\frac{1}{2} - \frac{3}{2}\frac{\varepsilon U}{\varkappa E a}\right)\frac{a^3}{r^2}\right]\cos\theta. \tag{99.26}$$

The velocity of the particle in the electric field is evidently determined by formula (99.21). For $\frac{2\mu + 3\mu'}{\epsilon^2/\varkappa} \gg 1$, i.e., at high values of viscosity and electrical conductivity and low surface charge, the drop velocity is

$$U = \frac{\varepsilon E a}{2\mu + 3\mu'}, \tag{99.27}$$

while for the reverse inequality $\frac{2\mu + 3\mu'}{\epsilon^2/\varkappa} \ll 1$, i.e., at low values of viscosity and electrical conductivity and for a high surface charge, the drop velocity is

$$U = \frac{\varkappa E a}{\varepsilon}. \tag{99.28}$$

The physical meaning of both limiting values of U is simple. The first limit corresponds to the case where the convective current around the drop, which tends to equalize the potential in the solution near the surface of the drop, is so small that it can be neglected. Then, it may be assumed that the potential difference in the solution near the drop is not equalized by the conductivity of the solution. The forces exerted on the surface of the drop can be balanced only by viscous stresses in the moving liquid. Thus U, as given by formula (99.27), is the velocity of the drop corresponding to such a balance of forces. In particular, the drop velocity is very low for the case of a very high viscosity μ' of the interior liquid. In the transition to a solid particle, i.e., with μ' tending toward infinity, the interior motion cannot be maintained and the drop will cease to move. The system of surface forces is then matched by a system of stresses in the solid particle. In reality, however, the particle can still pass into the usual electrophoretic motion.

In the second instance, for a low electrical conductivity of the medium, the convective current along the surface of the drop is so large that it completely equalizes the potential difference along the drop. The potential in the solution near the drop surface is then constant along the drop, which, therefore, behaves as a completely unpolarizable metal particle with a current flowing through it.

In order that the potential jump at the drop-solution interface may remain constant at all times, it is necessary that the convective current of the ions of the outer sheet of the double layer, carried by the liquid moving along the surface of the drop, be equal to this electric current. The convective current of the charges in the inner sheet is then short-circuited by a conduction current flowing within

the mercury drop, and, since the electrical conductivity of mercury is high compared with that of the solution, the potential difference thus established can be ignored. This condition is fulfilled when the velocity of the drop's surface motion is $v_0 = \frac{3}{2}$ U, where U is determined by formula (99.28).

It is convenient next to introduce a quantity Z expressing the mobility of the particle, i.e., the ratio of the velocity U to the strength of the external field,

$$Z = \frac{U}{E} = \frac{\varepsilon a}{2\mu + 3\mu' + \frac{\varepsilon^2}{\varkappa}}, \tag{99.29}$$

or a quantity z called the specific mobility, i.e., the mobility of the particle with a radius equal to unity,

$$z = \frac{\varepsilon}{2\mu + 3\mu' + \frac{\varepsilon^2}{\varkappa}}. \tag{99.30}$$

The dual role of the surface charge density is revealed with particular clarity in formulas (99.29) and (99.30). The charge, on the one hand, is the source of the motion of the drop and, on the other, causes a self-retarding action, which, for large ϵ, leads to a damping of the motion. The mobility reaches its maximum value at a charge density ϵ_{max},

$$\varepsilon_{max} = \sqrt{\varkappa(2\mu + 3\mu')}, \tag{99.31}$$

and is equal, at the maximum, to

$$z_{max} = \frac{1}{2}\sqrt{\frac{\varkappa}{2\mu + 3\mu'}}. \tag{99.32}$$

It follows from formula (99.26) that the quantity 3Ea is equal to the maximum potential difference between two points on the surface in the absence of motion. Let us denote this quantity by $\Delta\Phi_0$. Equation (99.21) may then be written in the form:

$$U = \frac{1}{3}\frac{\varepsilon(\Delta\Phi_0)}{2\mu + 3\mu' + \frac{\varepsilon^2}{\varkappa}} = \frac{1}{3} z(\Delta\Phi_0). \tag{99.33}$$

It is also interesting to observe that equation (99.21) for the velocity of a metal drop is very similar in form to the corresponding expression (95.13) for a solid (metal or dielectric) particle. As a matter of fact, if we ignore the difference in the numerical coefficients of the μ quantities, equation (99.21) can be derived from formula (95.13) by substituting a for d in the coefficients for ϵ and

$\frac{\epsilon^2}{\varkappa}$. This result may be interpreted in the following manner. In the case of a solid particle, the viscous motion of the liquid due to the field should decay within the limits of the double layer, i.e., over distances of the order of d. For a liquid metal particle, however, it should decay within the particle itself, i.e., over distances of the order of its radius a. Hence, the viscous stresses in the second case are smaller, while the corresponding mobility is greater than in the first by the ratio $\frac{a}{d}$. Similarly, in the transition from a solid to a liquid particle, the convective conductivity of the surface and, consequently, the retardation of the motion due to the electric field of the charges that are carried by the convective current on the particle surface also increase in the same ratio.

Let us now consider the mobility of mercury particles which are moving in an extremely viscous medium, and let the first regime of motion apply where the following inequalities are satisfied

$$\frac{\varepsilon^2}{\varkappa} \ll \mu \text{ and } \mu' \ll \mu.$$

For the velocity of the drop, we have

$$U = \frac{\varepsilon E a}{2\mu}. \tag{99.34}$$

A simple computation shows that the mobility of a mercury drop in an extremely viscous and highly conducting medium is equal to three quarters of the mobility that would be possessed, in a non-conducting medium, by a solid particle carrying a free charge equal to that of the inner sheet of the double layer of the mercury drop (and to one half the mobility of the same particle if it were liquid). Since the charge density in the double layer can be many times greater than the possible density of a free charge, mercury drops in a viscous, highly conducting solution have especially high mobilities.

It is also of interest to compute the surface conductivity of a metal drop and to compare it with that of a solid particle in electrophoretic motion. Because of equation (95.17) and on the basis of expressions (99.17), (99.19), (99.20), and (99.21), we have

$$\varkappa_s = \frac{|\varepsilon \mathbf{v}_t|}{|\operatorname{grad}_s \varphi|} = \frac{\varepsilon^2 a}{\mu}. \tag{99.35}$$

A comparison of this value for $\varkappa_s$ with expression (95.18) will show then that the surface electrical conductivity of a liquid metal drop exceeds that of a solid particle by the ratio a/d. Since the computed surface conductivity evidently represents the convective conductivity, which is related to the transfer of ions by the motion of the solution,

high velocities of motion on the surface of the drop correspond to very high values of $\varkappa_s$.

In addition to convective surface conductivity, the drop also possesses the usual ohmic conductivity. The latter is somewhat higher on the surface than in the bulk of the solution because the ion concentration in the double layer is greater than in the main stream. It is evident, however, that, in the case of particles of macroscopic dimensions ($a \gg d$), ohmic surface conduction can be neglected in comparison to convective conduction.

In deriving formula (99.21) it was assumed that in electrocapillary motions the surface tension at all points on the surface of the drop should depend only on the potential. This condition will not be fulfilled if, for example, surface-active materials are present in the solution and if the establishment of an equilibrium between the surface and the bulk of the solution requires time due to the slowness of the process of adsorption or diffusion of the adsorbed material. The surface tension in this case, even for constant $\Delta\varphi$, is greater on those parts of the drop where the mercury surface is distended (in the right portion of the drop in Figure 75), and less where the surface is contracted (the left portion of the drop). This increases the drag on the drop and reduces its mobility Z.

It should be possible to observe similar phenomena even in the absence of specifically adsorbed materials, provided that the establishment of equilibrium between the boundary layer and the bulk of the solution at a given potential is not instantaneous. Thus, for example, if the mercury surface is negatively charged and if both monovalent and polyvalent cations are present in the solution, there will be a relative excess of polyvalent cations in the surface layer, and, when the surface contracts, the adjacent layers of the solution will become richer in these polyvalent cations. The result is that the interfacial tension is different at various parts of the surface even though they are at the same potential. It is clear then that the current flowing through the solution does not equalize the changes which occur in the composition of the solution. This is possible only by diffusion, i.e., in a relatively slow manner, so that the retarding effects that take place can be very considerable.

The applicability of the theory developed above is also restricted to low velocities and small potential gradients. Thus, according to this theory, if the change in the interfacial tension over the surface is small compared to its initial value and if the motion of the drop falls within the region of small Reynolds numbers, the shape of the drop remains spherical throughout the process. Numerical estimates show, however, that, for large values of ϵ and sufficiently large drops, the drop's velocities U, as calculated by equation (99.21), are so great that the Reynolds number $\mathrm{Re} = \frac{Ua}{\nu}$ is by no means small compared to unity. Under these conditions, then, equation (99.21) is not valid and must accordingly be modified.

The motion of liquid bodies for Reynolds numbers greater than unity has not been studied in hydrodynamics in sufficient detail either theoretically or experimentally. Under these conditions a drop loses its spherical shape and becomes egg shaped, with the blunt end pointing forward. Furthermore, it follows from general considerations that the viscous drag is then small compared with the dynamic pressure on the drop and can therefore be neglected.

The dynamic pressure per cm^2 of drop surface can be presented in the form

$$\frac{F}{S} = \frac{K_f \rho U^2}{2},$$

where K_f is the drag coefficient, which is a complicated and as yet unknown function of the Reynolds number for the case of the liquid drop which concerns us. It may be assumed, however, that it is not very different from the analogous function for a solid, egg-shaped body and that the drag coefficient first decreases rather rapidly with a rise in Re and then remains almost constant over a wide range of Reynolds numbers.

The velocity of the drop may be estimated very roughly for values $Re \gg 1$ by equating the driving force and the dynamic pressure. Then

$$\varepsilon E \approx K_f \rho U^2,$$

i.e.,

$$U \approx \sqrt{\frac{\varepsilon E}{\rho K_f}}. \tag{99.36}$$

Since K_f here is an unknown function which, only in the roughest approximation, may be considered constant, the nature of formula (99.36) is qualitative. It shows that at large Reynolds numbers the velocity of the drop should increase with the charge more slowly than would follow from formula (99.21). Also, it should be a weak function of the viscosity of the mercury and of the solution.

It may also be assumed that certain changes in the shape of the drop, described by Christiansen [10], are precisely related to this effect (simple estimates show that the value of Re in his experiments was considerably greater than unity) and not to the change in interfacial tension of the drop, as was postulated by Christiansen. This is also apparent from the fact that if the change in the shape of the drop were caused by the variation in interfacial tension, the drop would become egg shaped with the pointed end forward, instead of backward as is actually observed. Indeed, the interfacial tension in the forward section of the drop would be lowered, and, if the deviation from a spherical shape were caused by changes in surface tension, it is this part which would jut forward, forming a pointed end on the drop.

Up to this point we have assumed in the course of the computations that the maximum variation in the potential along the drop is small compared to the initial potential jump

$$\varphi_0 = \frac{\varepsilon}{C},$$

where C is the specific capacitance of the double layer. However, the maximum change of the potential jump in the double layer is, in accordance with expression (99.26),

$$\frac{2\mu + 3\mu'}{2\mu + 3\mu' + \frac{\varepsilon^2}{\varkappa}} \frac{3Ea}{2},$$

and hence, for the theory to be applicable, the following inequality must hold

$$\frac{2\mu + 3\mu'}{2\mu + 3\mu' + \frac{\varepsilon^2}{\varkappa}} Ea \ll \frac{\varepsilon}{C}. \tag{99.37}$$

This will always be satisfied for $Ea \ll \varphi_0$. Conversely, if inequality (99.37) is not met, the variation in charge density over the surface of the drop can no longer be neglected in the computations. In fact, the variation may then be so great that one side of the drop is positively charged and the other negatively. In such a case, motions of the type described here should arise at both of the oppositely charged ends of the drop, but these motions will be in opposite directions. The over-all velocity of the drop should then obviously decrease sharply, and the drop itself might even break up. This is what Christiansen observed.

Let us also note that the motion of emulsified drops in an electric field can be examined in the very same manner as for the similar motion of mercury drops. The appropriate computations were made by A. I. Fedosov [26].

An emulsion drop differs from a mercury drop in that the electrical conductivity of the interior phase is then comparable to that of the exterior phase. In view of this, an electric field exists inside the drop, and condition (99.9) must be satisfied for both the interior and the exterior liquids.

Computations lead to the following expression for the velocity of electrocapillary motion of emulsion drops in an electric field:

$$U = \frac{\varepsilon Ea}{2\mu + 3\mu' + \varepsilon^2\left(\frac{1}{\varkappa} + \frac{2}{\varkappa'}\right)}, \tag{99.38}$$

where $\varkappa'$ is the conductivity of the interior phase.

For emulsions of water in oil $\varkappa' \gg \varkappa$, and equation (99.38) becomes (99.21). Here, it should be borne in mind, however, that water emulsion drops in oil will in fact not move at high velocities due, on the one hand, to the small value of ϵ for water drops and, on the other, to the low value of E in oil.

In the case of emulsions of oil in water, equation (99.38) acquires, in view of the smallness of $\varkappa'$, the form

$$U = \frac{\epsilon E a}{2\mu + 3\mu' + \frac{2\epsilon^2}{\varkappa'}} \approx \frac{\varkappa' E a}{2\epsilon}, \tag{99.39}$$

so that the velocity of the electrocapillary motion of oil drops is proportional to $\varkappa'$ and inversely proportional to ϵ. In particular, in view of the smallness of $\varkappa'$, this velocity is always very low.

100. MOTION OF NONIDEALLY POLARIZABLE DROPS IN AN ELECTRIC FIELD

Up to this point we have examined only the motion of ideally polarizable liquid particles.

Let us now pass [22] to an examination of a partially polarizable particle. Since we assume that the change of the potential jump at the metal-solution interface, upon the passage of a current, is small, it follows that for a drop to be incompletely polarizable — i.e., for ions to be formed or lose their charge on its surface — there must be, prior to the application of a current, an interchange of ions between the metal and the solution, as is the case, for example, with a drop of mercury in a solution containing Hg^{++} ions, or with a drop of zinc amalgam in a solution containing Zn^{++} ions.

The balance of the amount of electricity at the double layer-electrically neutral solution interface can, in the case of a nonideally polarizable particle, be written in the form

$$\varkappa \left(\frac{\partial \varphi}{\partial r}\right)_{r=a} = 2\,\frac{\epsilon v_0}{a}\cos\theta + i, \tag{100.1}$$

where i is the current density flowing through the surface of the drop. We assume this current to be sufficiently weak, so that the departure from equilibrium in the double layer can be neglected.

The relation between i and the potential difference φ between the metal and the solution depends on the particle's polarization mechanism.

In the simplest case of chemical polarization (either a hindered ion discharge or a particularly slow step in any of the other stages of the electrochemical reaction on the surface of the particle), this relation can be represented, for weak currents, by the linear law

$$i = k_0\varphi, \tag{100.2}$$

where k_0 may be termed the conductance of the metal-solution interface, and $\frac{1}{k_0} = \omega$, its resistance.

Equation (100.1) can then be rewritten in the form

$$\varkappa\left(\frac{\partial\varphi}{\partial r}\right)_{r=a} = 2\,\frac{\varepsilon v_0}{a}\cos\theta + \frac{\varphi}{w}. \tag{100.3}$$

Now, the solution of equation (99.8) for the potential satisfying boundary conditions (99.9) and (100.3) has the form

$$\varphi = E\left(r + \frac{\left(\frac{1}{2} - \frac{\varepsilon v_0}{\varkappa E a} - \frac{a}{2w\varkappa}\right)}{1 + \frac{a}{2w\varkappa}}\,\frac{a^3}{r^2}\right)\cos\theta, \tag{100.4}$$

and therefore the quantity α in equation (99.15) is, for a nonideally polarizable particle,

$$\alpha = 1 + \frac{\frac{1}{2} - \frac{\varepsilon v_0}{\varkappa E a} - \frac{a}{2w\varkappa}}{1 + \frac{a}{2w\varkappa}}.$$

By repeating computations similar to those presented previously we can derive the following expression for the velocity of the drop:

$$U = \frac{\varepsilon E a}{(2\mu + 3\mu')\left(1 + \frac{a}{2w\varkappa}\right) + \frac{\varepsilon^2}{\varkappa}}. \tag{100.5}$$

As should have been expected, the resulting conductance at the metal-solution interface leads to a decrease in the velocity of the particle (as compared to an ideally polarizable object). This reduction in the velocity of a nonpolarizable particle is related to the fact that the ponderomotive forces of such a system are smaller than those in an ideally polarizable particle, with the ratio of the first to the second being $1 : \left(1 + \frac{a}{2\omega\varkappa}\right)$. This applies both to the forces that are a function of the external field and to those associated with the self-retarding effect. Equation (100.5) should, therefore, be written in the form

$$U = \frac{\varepsilon E a\left(1 + \frac{a}{2w\varkappa}\right)^{-1}}{2\mu + 3\mu' + \frac{\varepsilon^2}{\varkappa}\left(1 + \frac{a}{2w\varkappa}\right)^{-1}}. \tag{100.6}$$

Also, since according to equation (100.4) we have for a nonideally polarizable drop

$$\Delta\Phi_0 = 3Ea\left(1 + \frac{a}{2\varkappa\omega}\right)^{-1}, \tag{100.7}$$

we can in this case replace equation (100.6) by:

$$U = \frac{1}{3}\frac{\varepsilon(\Delta\Phi_0)}{2\mu + 3\mu' + \frac{\varepsilon^2}{\varkappa}\left(1 + \frac{a}{2\omega\varkappa}\right)^{-1}}. \tag{100.8}$$

According to this result then, a decrease in ω produces a decrease in the velocity of the moving drop. The significance of the current's origin disappears if ω is sufficiently large compared to $\frac{a}{\varkappa}$. It is also unimportant if the drop is in the second regime of motion since the term $\left(1+\frac{a}{2\omega\varkappa}\right)$ will cancel out in equation (100.6). Indeed, if the external field is fully equalized by the convective current caused by motion of the double layer, the fact that a current can flow through the drop will have no effect on the velocity of the motion. As has been pointed out above, however, the derivation of equation (100.8) assumes that ω is not a function of θ. This condition is not fulfilled when the agitation of the solution is determined by the motion of the drop.

Let us consider qualitatively the phenomena which should be observable in this situation, taking as an example a positively charged drop of mercury in a mercury-salt solution. As the current flows through the drop (see Figure 75), mercury ions form on its right side, and the ion concentration in the solution increases. On the left side of its surface, however, the ions are discharged, and the solution becomes depleted. However, the changes in concentration which occur under these conditions differ in magnitude. Because of capillary motion, a stream of fresh solution containing the free stream concentration flows against the right side of the drop, whereas the left side is in contact with that part of the solution which has been enriched during its flow past the right side. Any excess ion concentration is deposited from the solution onto the mercury, so that the stream flowing from the drop in the direction of negative values of x has an average ion concentration equal to that of the bulk. Since, during the motion of the stream, excess mercury ions have time to diffuse to some extent from the surface of the drop into the bulk of the solution, a layer that is somewhat depleted compared to the free stream will exist immediately adjacent to the left side of the drop, while farther from the drop the solution will retain a higher concentration for a while. At a sufficiently great distance from the drop, all these variations in composition should disappear, and the concentrations at all points should return to their initial value. With such a distribution in composition, it is evident that deviations from the initial concentration, and, consequently, the change in potential as well, are greater near the right side of the drop than near the left

side. In other words, as already pointed out above, the quantity ω is a function of the angle θ and decreases as θ varies from 0 to π. The flow of current, under these conditions, should likewise cause a certain shift in the average value of the potential jump in the double layer, tending to increase the positive charge of the drop.

On the other hand, if the drop is negatively charged, the picture is reversed. The stream of liquid moves from left to right, with respect to the drop, and the deposition of ions is from a solution containing the initial concentration of metal ions. Thus depleted, the solution arrives at the right side of the surface, where its concentration increases to its initial value. The shift in potential, under these conditions, is larger in absolute value on the left side than on the right, so that the average value of the potential of the drop is shifted in a direction of an increased negative charge of the metal surface.

It is clear that, in the presence of such a complicated dependence of ω on the angle θ, it is not possible to compute accurately the effect of incomplete polarization on the velocity. An approximate estimate can, however, be given, if equation (100.8) is retained with a certain average value of ω, which may be obtained from the expression for the limiting diffusion current $i_{\lim}$, and from the relation $\omega = \frac{RT}{zFi_{\lim}}$. We found, in Section 72 and Section 14, that the average density of the limiting diffusion current is determined from the expressions:

$$i_{\lim} = zFj = \frac{zF\overline{I}}{4\pi a^2} = 0.6\left(\frac{v_0 D}{a}\right)^{1/2} zFc_m \tag{100.9}$$

and for a solid particle

$$i_{\lim} = zFj = \frac{zF\overline{I}}{4\pi a^2} = 0.6\left(\frac{UD^2}{a^2}\right)^{1/3} zFc_m. \tag{100.10}$$

Here, I is the total diffusional flow to the drop; z and c_m are respectively the metal ion valence and the initial concentration of the ions of the drop metal (in gram equivalents per cm^3).

As an example, let us determine the magnitude of the coefficient $k = 1 + \frac{a}{2\omega\varkappa}$ with $a = 10^{-2}$ in the case of the deviation in an electric field of a mercury drop, falling by gravity in a solution containing a neutral electrolyte of concentration c and mercury ions of concentration c_m. It is assumed in this example that the hydrodynamic conditions of drop motion are preserved $\left(\frac{\epsilon^2}{\varkappa(2\mu + 3\mu')} \ll 1\right)$. Since $U \approx 30$ cm/sec,

$$D \approx 0.8 \cdot 10^{-5}; \quad \varkappa \approx 1.2 \cdot 10^2 c; \quad z = 2,$$

$$\frac{a}{2\omega\varkappa} = \frac{0.6\, a^{1/3} U^{1/3} D^{1/3} F c_m}{\varkappa \frac{RT}{F} \cdot \frac{1}{z}} \approx 10^2 \frac{c_m}{c}. \tag{100.11}$$

Thus, the quantity $k = 1 + \frac{a}{2\omega\varkappa}$, which may be termed the depolarization coefficient, is a function of the ratio of the concentration of the metal ions in the drop to the over-all concentration of the solution. If $\frac{c_m}{c} \approx 10^{-2}$, this coefficient is noticeably different from unity, and for $c_m = c$ (i.e., for a mercury drop in a solution containing only a mercury salt) the deviation from the vertical of a falling drop in an electric field is about 100 times less than in the case of an ideally polarizable drop. Of major importance is the fact that, contrary to some published statements, the incomplete polarizability of a drop always leads to a decrease in its mobility as compared to that of an ideally polarizable drop.

101. COMPARISON OF THEORY AND EXPERIMENT

An experimental verification of the theory was conducted [24b] by means of an instrument (Figure 76) which was used to determine the deviation from the vertical of falling drops of mercury in an electric field. The mercury, under the pressure of a column of the metal, flowed from a capillary tube in drops 0.036 cm in radius. They fell through a solution of KBr in glycerine $C_3H_5(OH)_3$. The drops were spaced in time about 0.9 to 1 sec apart. The viscosity of the solutions which were employed was about 2.6 to 3.3 poise, at 21 to 22°. The velocity of fall of the drop due to gravity was about 1.2 to 1.3 cm/sec, and the Reynolds number was, therefore, of the order of 0.04. The falling drops formed a column of mercury droplets along the axis of the instrument, and were separated from each other by a distance of approximately 1.3 cm.

As the drops grew on the end of the capillary they formed a circuit with an auxiliary electrode (Figure 76) and were charged by an applied emf that directed a charging current over the growing drop. The charge density on the drop was calculated by measuring this current and dividing it over the area of the drop.

The intensity of the electric field was varied from 0.25 to 1.8 v/cm, so that the potential difference in the solution did not exceed 0.1 v.

The mobility of the mercury drops in the electric field was determined by their deviation from the vertical path, which is the one followed by the drops when the electric field is absent.

The dependence of mobility on the charge per unit area was determined by varying the value of the charging current on the drop.

The points in Figure 77 illustrate the experimentally determined mobility of mercury drops in an electric field as a function of ϵ, while the solid curves represent mobilities as computed by means of equation (99.30). Curves a refer to the most concentrated solution, and curves b to the most dilute.

The general conclusion may be reached on the basis of the curves in Figure 77 that the theory presented above is in good agreement with the experimental results. Thus, in accordance with the theory, the experimentally observed mobility of mercury drops first increased with an increase in the absolute charge on the drop, and then began to decrease. In the transition from concentrated to dilute solutions, the maximum value of the mobility of the mercury drops decreased on both the positive and the negative branches of the curve. The maximum, which is entirely absent in curves for concentrated solutions, is shown especially well in this case.

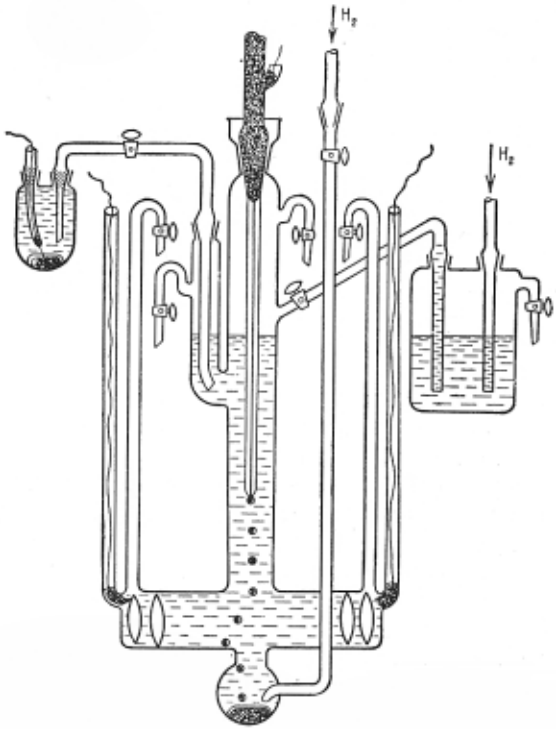

Figure 76. Instrument for determining the mobility of mercury drops in a horizontal electric field.

For the solutions which were tested, however, the values for the observed mobility, as compared to the theoretical predictions, were shifted in the direction of negative charges. Thus, the mobility of the mercury drops passed through zero, not at a charge equal to zero as expected theoretically, but at a slightly negative charge equal to approximately 3 to $6 \cdot 10^{-6}$ coul/cm^2. The mobilities observed in dilute solutions were somewhat less than those computed,

especially for $\epsilon < 0$. This is probably related to a certain drop in the potential of the applied field across the droplet, which could have led to a decrease in the drop's velocity in the region of a rapidly charging $U(\epsilon)$ function (steep curve). Despite these small differences between the computed and the observed mobilities, it is justified, considering the complexity of the phenomenon and the absence of any arbitrary constants in the theoretical formulas, to assert that a satisfactory quantitative agreement between theory and experiment has been established.

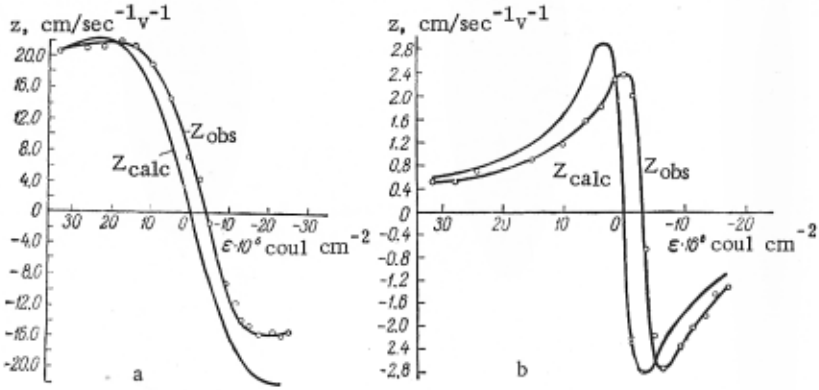

Figure 77. Mobility of mercury drops in an electric field: a — 1.5 N KBr, $\varkappa = 7 \cdot 10^{-3}$; b — 0.02 N KBr, $\varkappa = 1.9 \cdot 10^{-5}$.

The observed deviations apparently are related to variations in the charge during the fall of the drop, which could have been caused by the action of remnants of dissolved oxygen that could not be entirely eliminated from the solution.

102. FALL OF MERCURY AND EMULSIFIED DROPS IN A GRAVITATIONAL FIELD

The presence of a charge on the surface of a mercury drop is of very great significance in determining the motion of the drop not only in an electric, but also in a gravitational field [22]. Let us then examine the fall of a mercury drop in an electrolytic solution. The resulting motion of the solution on the surface of the drop causes an entrainment of the ions in the outer sheet of the double layer, which are thus carried to the rear of the drop. A convective current of ions at its rear generates an electric field in the solution near the drop, even though no external electric field is present.

The electric field that thus appears in the solution tends to equalize the ion concentration on the drop surface by moving them in a direction opposite to that of the fluid convection. However, in

addition to the equalization of potential brought about in this manner, the potential difference is also equalized by electric currents in the bulk of the solution, which are passing through the solution from the back to the front of the drop.

To obtain the velocity of fall of a drop of mercury in an electrolytic solution, we must first determine the potential distribution in the solution and the magnitude of the retarding forces that are generated. Since there are no charges in the bulk of the solution, the potential distribution in this region is found from the Laplace equation

$$\Delta\varphi = 0, \tag{102.1}$$

together with condition (99.9), i.e.,

$$\varkappa \frac{\partial\varphi}{\partial r} = \operatorname{div}_s(\varepsilon \mathbf{v}_t), \tag{102.2}$$

which evidently serves as the boundary condition on the surface of the drop. Also, since there is no external field at infinity, we must require that far from the drop

$$\varphi \to 0. \tag{102.3}$$

For v_t different from zero, it is obvious that the potential distribution around the drop satisfying equation (102.2) cannot be spherically symmetric. Along the drop, therefore, a certain change in potential takes place which in turn causes a variation of surface tension and the appearance of the corresponding surface forces. The system of hydrodynamic equations which determines the velocity distribution in the solution and in the drop must be solved by taking these forces into account. Let us restrict our further analysis to the case of small Reynolds numbers, for which equations (70.28) to (70.33) can be written for the velocity distribution inside and outside the drop.

Equations (99.11) to (99.14) now serve as boundary conditions on the surface of the drop. Here, as was done in Section 70, an effective pressure π must be introduced into equation (99.13) for the normal component in order to account for the volumetric effect of gravity on the drop. Also, the surface forces F_t and F_n are given, as previously, by equations (99.6) and (99.7), while the velocity at infinity must satisfy equation (99.10).

If we designate the velocity of the liquid at the mercury-solution interface by v_0, we can set:

$$(v_0)_{r=a} = v_0 \sin\theta, \tag{102.4}$$

which when introduced into boundary condition (102.2) yields:

$$\left(\frac{\partial\varphi}{\partial r}\right)_{r=a} = \frac{2}{\varkappa}\frac{v_0\varepsilon}{a}\cos\theta. \tag{102.5}$$

The solution for the potential satisfying equation (102.1) with boundary conditions (102.5) and (102.3) is:

$$\varphi = -\frac{\varepsilon v_0 a^2}{\varkappa r^2}\cos\theta. \tag{102.6}$$

Thus, it follows from equations (99.6), (99.7), and (102.6) that the forces exerted on the drop's surface are:

$$F_n = \frac{2\sigma_{\pi/2}}{a} - \frac{2\varepsilon\,\Delta\varphi}{a} = \frac{2\sigma_{\pi/2}}{a} + \frac{2\varepsilon^2 v_0}{\varkappa a}\cos\theta, \tag{102.7}$$

$$F_t = \operatorname{grad}_\theta \sigma = -\varepsilon \operatorname{grad}_\theta \Delta\varphi = -\frac{\varepsilon}{a}\frac{\partial\,\Delta\varphi}{\partial\theta} = \frac{\varepsilon^2 v_0}{\varkappa a}\sin\theta. \tag{102.8}$$

Introducing expressions (102.7) and (102.8) into equations (99.13) and (99.14), we have, at r = a:

$$-p + 2\mu\frac{\partial v_r}{\partial r} + \pi = -p' + 2\mu'\frac{\partial v_r'}{\partial r} - \frac{2\sigma_{\pi/2}}{a} + \frac{2\varepsilon^2 v_0}{\varkappa a}\cos\theta, \tag{102.9}$$

$$\mu\left(\frac{1}{r}\frac{\partial v_r}{\partial\theta} + \frac{\partial v_\theta}{\partial r} - \frac{v_\theta}{r}\right) = \mu'\left(\frac{1}{r}\frac{\partial v_r'}{\partial\theta} + \frac{\partial v_\theta'}{\partial r} - \frac{v_\theta'}{r}\right) + \frac{\varepsilon^2 v_0}{\varkappa a}\sin\theta. \tag{102.10}$$

Equations (102.9) and (102.10) reduce to:

$$-\mu\left(\frac{3b_2}{a^2} + \frac{6b_1}{a^4}\right) = -6\mu' a_1 a - (\rho - \rho')ga + \frac{2\varepsilon^2 v_0}{\varkappa a}, \tag{102.11}$$

$$-\frac{3\mu b_1}{a^4} = -3\mu' a_1 a + \frac{\varepsilon^2 v_0}{\varkappa a}, \tag{102.12}$$

by substitution of the appropriate expression for the velocities and the pressure. The boundary conditions (99.11) and (99.12), together with the conditions at infinity, yield

$$\frac{b_2}{a} + \frac{b_1}{a^3} - U = 0, \tag{102.13}$$

$$\frac{b_1}{2a^3} + U - \frac{b_2}{2a} = v_0, \tag{102.14}$$

$$a_1 a^2 + a_2 = 0, \tag{102.15}$$

$$-2a^2 a_1 - a_2 = v_0. \tag{102.16}$$

Following elementary transformations, we finally obtain v_0 and U:

$$v_0 = \frac{(\rho - \rho')\,ga^2}{3\left(2\mu + 3\mu' + \frac{\varepsilon^2}{\varkappa}\right)}, \tag{102.17}$$

$$U = \frac{2(\rho - \rho')\,ga^2}{3\mu}\,\frac{\mu + \mu' + \frac{\varepsilon^2}{3\varkappa}}{2\mu + 3\mu' + \frac{\varepsilon^2}{\varkappa}}. \tag{102.18}$$

For the sake of brevity, let us write down the velocity distributions inside and outside the drop without giving an explicit solution for the other constants:

$$v_r = \frac{1}{\mu}\left\{2\mu\left(\frac{a}{r}-1\right)+\left(\frac{a}{r}-\frac{a^3}{3r^3}-\frac{2}{3}\right)\left(3\mu'+\frac{\varepsilon^2}{\varkappa}\right)\right\} v_0 \cos\theta, \tag{102.19}$$

$$v_\theta = \frac{1}{\mu}\left\{\mu\left(2-\frac{a}{r}\right)-\left(\frac{a^3}{2r^3}+\frac{3}{2}\frac{a}{r}-2\right)\left(\mu'+\frac{\varepsilon^2}{3\varkappa}\right)\right\} v_0 \sin\theta, \tag{102.20}$$

$$v'_r = \left(1-\frac{r^2}{a^2}\right) v_0 \cos\theta, \tag{102.21}$$

$$v'_\theta = \left(2\frac{r^2}{a^2}-1\right) v_0 \sin\theta. \tag{102.22}$$

We may now present the final expressions for the distribution of the potential and for the density of the electric current on the surface of the drop

$$\varphi = \frac{\varepsilon(\rho-\rho')ga}{3\left(2\mu+3\mu'+\frac{\varepsilon^2}{\varkappa}\right)\varkappa}\cdot\frac{a^3}{r^2}\cos\theta, \tag{102.23}$$

$$i = -\varkappa\left(\frac{\partial\varphi}{\partial r}\right)_{r=a} = \frac{2}{3}\cdot\frac{(\rho-\rho')ga\varepsilon}{\left(2\mu+3\mu'+\frac{\varepsilon^2}{\varkappa}\right)}\cos\theta. \tag{102.24}$$

Equation (102.18) shows that, as in the case of an electric field, two limiting cases of motion in a gravitational field exist.

1) $2\mu + 3\mu' \gg \frac{\epsilon^2}{\varkappa}$. Here the velocity U for the fall of the drop is equal to that of an uncharged drop, as given by the Hadamard-Rybczyński formula (70.35). This result may be given the following physical interpretation. The potential differences is evened up through the solution so rapidly that the convective current of ions along the surface is compensated by currents through the adjacent layers of the solution without any noticeable accumulation of charges at the rear end of the drop. Thus, in this instance, the convective transfer of ions along the surface is unhindered, and the electric field that is generated does not retard the motion of the liquid along the surface. The velocity of fall of the drop is, therefore, determined by the Hadamard-Rybczyński formula in the same way as in the absence of an electrolyte.

2) $2\mu + 3\mu' \ll \frac{\epsilon^2}{\varkappa}$. Here the velocity of the drop's fall coincides with that of a solid sphere, as given by the Stokes formula

$$U_{St} = \frac{2}{9}\frac{(\rho-\rho')ga^2}{\mu}. \tag{102.25}$$

This is caused by the fact that no time is available for the equalization of the potential, so that the ions accumulate continuously at the

rear end of the drop until the generated electric field fully retards the convective transfer of ions along the surface. In other words, the electric field generated in this instance arrests the motion of mercury along the surface of the drop, and causes it to fall like a solid sphere. The velocity of fall of such a "solidified" drop is fully described by Stokes' law [25]:

Let us next examine the ratio of the velocity of the drop's fall to that of a solid sphere, i.e., the ratio of equation (102.18) to (102.25),

$$\frac{U}{U_{\mathrm{St}}}=\frac{3\mu+3\mu'+\frac{\epsilon^2}{\varkappa}}{2\mu+3\mu'+\frac{\epsilon^2}{\varkappa}}. \tag{102.26}$$

It is clear from (102.26) that this ratio attains its highest value when the viscosity μ of the medium is considerably greater than the viscosity μ' of mercury. Under such conditions

$$\frac{U}{U_{\mathrm{St}}}=\frac{3\mu+\frac{\epsilon^2}{\varkappa}}{2\mu+\frac{\epsilon^2}{\varkappa}}. \tag{102.27}$$

The dependence of the ratio $\frac{U}{U_{St}}$ on the charge ϵ is shown by the solid line in Figures 78 and 79. At the point $\epsilon = 0$, the ratio $\frac{U}{U_{St}}$ attains its maximum value of 1.5.

Let us now clarify the region of validity of equation (102.18). To assure its applicability, the following conditions must be fulfilled:

1) the Reynolds number must be extremely small compared to unity;

2) surface conductivity must be low compared to that of the bulk of the solution;

3) the maximum potential variation along the drop must be small compared to the initial jump in potential in the double layer;

4) the maximum variation in the surface tension must not exceed a certain limit $\Delta\sigma_{max}$;

5) surface tension must depend only in the charge per cm^2 of the drop's surface.

The value of $\Delta\sigma_{max}$ is determined by the condition that the charge accumulation at the rear end of the drop must, at some moment, generate an electrolysis between the two ends of the drop, which could, for example, be related to the passage of mercury ions from the double layer into the solution (if the drop's charge is positive). The meaning of the first condition is obvious. The second has been discussed in Section 99, so let us examine conditions 3) and 4).

The requirement that the potential difference along the drop be small compared to that in the double layer can be represented by the expression

$$(\Delta\Phi)_{\max} = \frac{2}{3}\frac{\varepsilon(\rho-\rho')ga^2}{\varkappa\left(2\mu+3\mu'+\frac{\varepsilon^2}{\varkappa}\right)} < \frac{\varepsilon}{C}, \tag{102.28}$$

where C is the capacitance of the double layer. For the case of a viscous solution, and for $\frac{\epsilon^2}{\varkappa} \ll 2\mu + 3\mu'$, equation (102.28) can be written in the form

$$\frac{3U_{\mathrm{St}}}{2\varkappa} < \frac{1}{C},$$

or

$$\varkappa > \frac{3}{2}CU_{\mathrm{St}}. \tag{102.29}$$

Thus, equation (102.28) is not applicable to very dilute solutions.

The fourth condition places a limitation on the size of the falling drops. Indeed, since

$$\Delta\sigma = \varepsilon(\Delta\Phi)_{\max} = \frac{2}{3}(\rho-\rho')\cdot\frac{ga^2\varepsilon^2}{\varkappa}\frac{1}{2\mu+3\mu'+\frac{\varepsilon^2}{\varkappa}} < \Delta\sigma_{\max},$$

it follows that, for high charges,

$$\frac{2}{3}(\rho-\rho')ga^2 < (\Delta\sigma_{\max}),$$

or

$$a < \sqrt{\frac{3}{2}}\frac{(\Delta\sigma_{\max})^{1/2}}{\sqrt{(\rho-\rho')g}} = a_{\mathrm{cr}}. \tag{102.30}$$

The further accumulation of charges at the rear of the drop and an increase in their retarding effect on it are impossible for values of a exceeding a_{cr}. This is so because, for large drops, the retarding forces can no longer compete with the liquid's inertial forces, and drops greater than a_{cr} must fall in a "liquid" regime. It may normally be assumed that $\Delta\sigma_{\max}$ is 20 to 30% of the total surface tension. It should also be remarked that equation (102.30) coincides with (78.4), which was derived for the case of the retarding action of surface-active materials.

The last limitation, the fifth, implies that surface-active materials are absent from the solution.

An experimental verification of equation (102.18) was made by A. N. Frumkin and I. A. Bagotskaya [24a]. The fall of the drops was studied, under conditions most favorable for a verification of the theory, in solutions of KBr and Na_2SO_4 in glycerine with a viscosity of 5 to 7 poises (which is considerably in excess of that of mercury, which is 0.01 poise). The fall of drops 0.056 cm in diameter took place, with intervals of 3 to 5 cm between drops. The solution was carefully cleansed of oxygen, although traces of oxygen remained and amounted to a 2 to $3 \cdot 10^{-6}$ molar solution. By diffusing to the surface of the drop, the oxygen caused a gradual reduction in its charge during the fall. The authors introduced a correction for this effect by computing the number of oxygen molecules arriving at the surface according to equation (72.10). The ratio $\frac{U}{U_{St}}$ which was computed in this manner is presented by the broken curves in Figures 78 and 79, while the circles in the same figures indicate the measured values for this ratio.

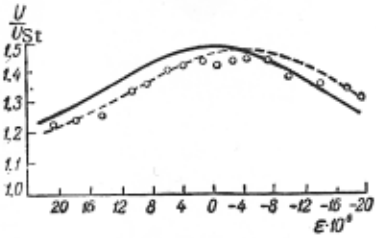

Figure 78. Velocity of fall of a mercury drop in 1 N KBr in glycerine, as a function of the surface charge density, $\varkappa = 5 \cdot 10^{-4}$, $\mu = 4.8$, a = 0.434 mm. Solid line represents U_{calc} according to (102.26); broken curve shows U_{calc} according to (102.26) taking into account (72.10) and assuming $\epsilon - \epsilon_0 = 8 \cdot 10^{-6}$; ooo gives U_{obs}.

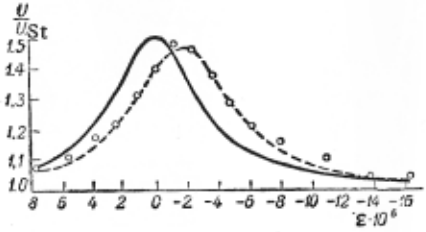

Figure 79. Velocity of fall of a mercury drop in saturated Na_2SO_4 in glycerine, $\varkappa = 8.1 \cdot 10^{-6}$, 7.2, a = 0.442 mm. Solid line represents U_{calc} according to (102.26); dotted line shows U_{calc} according to (102.26); taking account of (72.10) and assuming $\epsilon - \epsilon_0 = 3.4 \cdot 10^{-6}$; ooo gives U_{obs}.

The agreement of the theoretical formulas with the experimental data is essentially complete.

I. A. Bagotskaya pointed out that the introduction of mercury ions into the solution brings about a considerable reduction of the retarding action. This is in qualitative agreement with the conclusion in Section 100 for an incompletely polarizable drop.

Equation (102.18) for the velocity of fall may now easily be generalized for the case of falling drops of an emulsion. Here, however, a phenomenon should be noted which has no analogue in the

case of mercury drops falling in a conducting medium. Namely, where the motion takes place in a medium of low conductivity, the effects noted in Section 100 may appear.

The transfer of ions in a dilute binary solution may lead to their unequal distribution on the drop. This distribution will not have time to be equalized by conduction (migration) and diffusion, and as a result, an electrical convective-diffusion field will appear. The total current in the drop will, in this case, be zero, and in order to estimate the field thus generated, equation (51.24) may be utilized. This formula may be conveniently rewritten with the help of formula (75.4′), so that

$$E \sim \frac{D_2 - D_1}{(z_1 D_1 + z_2 D_2)} \frac{RT}{F} \frac{v_0 \Gamma_0}{D_{\text{eff}}\, a} \frac{\delta}{c_0} \sim \frac{D_2 - D_1}{D_1 D_2} \cdot \frac{RT v_0 \Gamma_0}{Fa} \frac{\delta}{c_0}, \qquad (102.31)$$

where only the ion concentration in the bulk of the solution and the surface concentration appear.*

103. POTENTIALS OF FALLING DROPS

We saw in the preceding section that a potential difference $\Delta\Phi$, given by equation (102.28), appears across the ends of a mercury drop falling in an electrolytic solution. If a series of drops fall in succession in the solution, a certain potential difference will be established along the column of drops. This is termed the falling-drop potential or sedimentation potential [25].

In order to compute this potential difference, let us assume that the number of drops per unit volume of the solution is sufficiently small, so that the distance between the drops is large compared to their own dimensions. We can then consider that the drops fall independently of one another and that the electric fields of the drops are additive. The sedimentation potential can in this instance be calculated exactly.

Let us first examine in more detail the case of a single drop falling through a column of liquid, and let us find the average value $\overline{\varphi}_u$ of the potential in a plane S, which is situated above the drop at a small distance compared with the radius of the column, but in such a manner that it does not intersect the drop. The cross-sectional dimensions of the liquid column in this case are large compared to the dimensions of the drop. Let us place the origin of the coordinates in the center of the drop. The area of that element of the plane situated between the angles θ and $\theta + d\theta$ is $\frac{2\pi r^2 \sin\theta}{\cos\theta} d\theta$. With the help of equation (102.23) $\overline{\varphi}_u$ may therefore be expressed as

*Proofreading note. This conclusion was arrived at independently by S. S. Dukhin and B. V. Deryagin (see p. 286).

$$\bar{\varphi}_u = \frac{1}{S}\int \frac{2\pi r^2 \sin\theta}{\cos\theta}\,\varphi\, d\theta =$$

$$= \frac{2\pi}{S}\,\frac{\varepsilon(\rho-\rho')\,ga^4}{3\varkappa\left(2\mu+3\mu'+\frac{\varepsilon^2}{\varkappa}\right)}\int_{\pi/2}^{\pi}\sin\theta\, d\theta = -\frac{2\pi}{S}\,\frac{\varepsilon(\rho-\rho')\,ga^4}{3\varkappa\left(2\mu+3\mu'+\frac{\varepsilon^2}{\varkappa}\right)}.$$

In the same manner, we obtain for the portion of the plane which is situated below the drop:

$$\bar{\varphi}_d = \frac{2\pi}{S}\,\frac{\varepsilon(\rho-\rho')\,ga^4}{3\varkappa\left(2\mu+3\mu'+\frac{\varepsilon^2}{\varkappa}\right)},$$

so that the sedimentation potential caused by the drop falling in the liquid column is

$$\bar{\varphi}_d - \bar{\varphi}_u = \frac{4\pi}{S}\,\frac{\varepsilon(\rho-\rho')\,a^4 g}{3\varkappa\left(2\mu+3\mu'+\frac{\varepsilon^2}{\varkappa}\right)}. \tag{103.1}$$

Let us also designate by n the average number of drops per unit volume. The sedimentation potential E in a liquid column 1 cm long in which there is a shower of falling drops is, obviously,

$$E = nS(\bar{\varphi}_d - \bar{\varphi}_u) = \frac{4\pi n\varepsilon(\rho-\rho')\,ga^4}{3\varkappa\left(2\mu+3\mu'+\frac{\varepsilon^2}{\varkappa}\right)} = \frac{2\pi a^2\mu\varepsilon n U}{\varkappa\left(\mu+\mu'+\frac{\varepsilon^2}{3\varkappa}\right)}, \tag{103.2}$$

where S is the cross section of the tube in which the drops are falling. The magnitude of the potential E of the falling drops is proportional to $\frac{\epsilon}{2\mu+3\mu'+\frac{\epsilon^2}{\varkappa}}$, to the number n of drops per cm^3 of solution, and to the radius of the drops. As with the mobility of a drop in an external field according to (99.30), this quantity E passes through a maximum at $\epsilon_{max} = \sqrt{\varkappa(2\mu+3\mu')}$.

When we complete the circuit formed by the liquid column of length L and cross section S with an external resistance W, the potential difference in the external portion of the circuit balances, so that a current I flows through the entire liquid column and the external resistance. This current is superimposed on the system of local currents at the falling drops. Since the emf in this circuit is EL, we have

$$I = \frac{EL}{\frac{L}{S\varkappa}+W} = \frac{I_0\frac{L}{S\varkappa}}{\frac{L}{S\varkappa}+W}, \tag{103.3}$$

where I_0 is the current which flows when W = 0, i.e., when the column is short-circuited. According to equations (103.2) and (102.18)

$$I_0 = ES\varkappa = \frac{4\pi nS\varepsilon(\rho-\rho')ga^4}{3\left(2\mu+3\mu'+\frac{\varepsilon^2}{\varkappa}\right)} = \frac{2\pi a^2 nSU\varepsilon\mu}{\mu+\mu'+\frac{\varepsilon^2}{3\varkappa}}. \tag{103.4}$$

In the case of positively charged drops, the current in the external circuit flows upward, while in the column itself it flows from the top toward the bottom, i.e., in a direction opposite to that of the local currents near each drop. Indeed, short-circuiting the ends of the liquid column is equivalent to applying across it an external potential difference equal in magnitude and opposite in sign to the total sedimentation potential EL. In this case, the potential determined by equation (102.23) decreases. Let us find the magnitude of this correction for a case which is especially important, namely, when the drop is in a "liquid" motion regime where $\frac{\varepsilon^2}{\varkappa} \ll 2\mu + 3\mu'$. Then, according to equation (99.26), the potential in the liquid column near the drop, caused by the flow of current I_0, is

$$-E\left\{r+\frac{1}{2}\frac{a^3}{r^2}\right\}\cos\theta,$$

which leads to the following expression for the potential distribution and electric current density on the surface of the drop, in place of (102.23):

$$\varphi = \frac{\varepsilon(\rho-\rho')ga\cos\theta}{3\varkappa(2\mu+3\mu')}\left\{\frac{a^3}{r^2} - 4\pi na^3\left(r+\frac{1}{2}\frac{a^3}{r^2}\right)\right\}. \tag{103.5}$$

At the surface of the drop, i.e., at r = a, the ratio of the second term in equation (103.5) to the first is small and equals $6\pi na^3$ when the distance between the drops is large compared to their radius. In other words, the completion of the external circuit has no significant effect on the potential distribution in the immediate vicinity of each drop, thus justifying our use of (103.2) in equation (103.4).

For the case of an open external circuit, the total current through each horizontal cross section of the liquid column is equal to zero, which means that the amounts of electricity carried by the convective current caused by the motion of the outer sheets of the double layer and by the conduction current are equal and opposite in sign. One might be tempted to conclude that the value of the conduction current is equal to the "current of the falling drops" which flows in the external circuit and in the liquid column when the latter is short-circuited. As may be easily proved by the following argument, however, this is not in accordance with the facts. Let us draw a horizontal plane through the drop, and let θ_a be the angle between the vertical and the radius vector a, drawn from the center of the drop to points where the surface of the drop intersects this plane. The

current emerging from the lower portion of the drop and entering the upper portion, and passing, therefore, through the indicated cross section of the solution, is

$$I' = -\varkappa \int_0^{\theta_a} 2\pi a^2 \left(\frac{\partial \varphi}{\partial r}\right) \sin\theta \, d\theta = \frac{2\pi\varepsilon(\rho - \rho') g a^3 \sin^2\theta_a}{3\left(2\mu + 3\mu' + \frac{\varepsilon^2}{\varkappa}\right)}. \qquad (103.6)$$

The number of drops in the tube for θ_a between θ and $\theta + d\theta$ is $nSa \sin\theta \, d\theta$, so that the total current is

$$I'' = \int_0^{\pi} I' nSa \sin\theta \, d\theta = \frac{8}{9} \cdot \frac{\pi\varepsilon(\rho - \rho') g a^4 nS}{2\mu + 3\mu' + \frac{\varepsilon^2}{\varkappa}} = \frac{2}{3} I_0. \qquad (103.7)$$

The reason for the difference between I'' and I_0 becomes apparent if it is recalled that these two currents, the total current flowing through the liquid when the column is short-circuited and the current in the open circuit, are related to the corresponding potential differences at the ends of the column. In terms of absolute values, these differences are equal. However, the solution acts like a uniform conductor for the current I_0, while the current lines of I'', which is the sum of the local currents of individual drops, curve around the drop surfaces and deviate from the shortest route.

It follows from equation (103.4) for the limiting "liquid" flow regime that:

$$I_0 = 2\pi n\varepsilon a^2 S\mu \frac{U}{\mu + \mu'}. \qquad (103.8)$$

Since the quantity $4\pi\epsilon a^2 nSU$ expresses the total charge on the inner sheet of the double layer around the drops passing through a cross section of the tube in unit time, the numerical value of the current generated by the falling drops differs, in this instance, from that which would result from the fall of spheres with a free charge equal to the total charge on the inner sheet of the double layer, only by the coefficient

$$\frac{\mu}{2} \cdot \frac{1}{\mu + \mu'} \approx 0.2.*$$

---

*At first glance, such a result appears paradoxical. It is simple to understand, however, that in the first limiting case the convective current transfers a quantity of electricity of the order of $2\pi a\epsilon U$ from the lower to the upper part of the drop, i.e., through a distance a. The product of these two quantities, $2\pi a^2\epsilon U$, is the same order of magnitude as the product of the velocity of fall and the total free charge, e.g., $4\pi a^2\epsilon U$ in the case of a charged sphere.

This reasoning loses validity in a "dense" shower of mercury drops, when the distance between the drops is comparable to their radius, i.e., $\sqrt[3]{n} \approx a$. In this case, which, incidentally, is only of theoretical interest because of the difficulty of achieving it in actual practice, the electric fields near each drop can no longer be viewed independently from one another, and the local deviations from equipotentiality are averaged out. This is akin to an increase in the conductivity of the medium surrounding the drop, as a result of which the retarding action of the charge on the motion of the drop's surface is decreased. In addition, the completion of the external circuit has, under such conditions, a significant effect on the potential distribution near each drop. For the limiting case of a very "dense" shower, the retarding action of the charge should disappear on short-circuiting the external circuit. This would occur if the liquid were pressed through a solid diaphragm. The closing of the external circuit in a "dense" shower would also have an effect on the velocity of fall of the drops.

Equation (103.4) can be applied only if all the conditions which were formulated in the preceding section are strictly fulfilled.

All the formulas presented here relate to the case of an ideally polarizable drop. In the presence of mercury ions, the variation of the potential jump across the double layer, due to convective currents, is partially equalized by a discharge on the surface of the mercury. This leads to a reduction in the sedimentation potential. At the same time, the retarding effect on the motion is also reduced. However, just as for the similar case examined in Section 100, a rigorous computation is impossible because of the complex nature of the relation between the magnitude of the limiting diffusion current and the angle θ. If the limiting diffusion current were not a function of θ, then, for incompletely polarizable drops, equation (103.2) would have to be replaced by:

$$E = \frac{4\pi}{3} \cdot \frac{n\varepsilon(\rho - \rho')\, g a^4 k^{-1}}{\varkappa(2\mu + 3\mu') + \varepsilon^2 k^{-1}} = \frac{4\pi n\varepsilon(\rho - \rho')\, g a^4}{3[\varkappa k(2\mu + 3\mu') + \varepsilon^2]}, \qquad (103.9)$$

where

$$k = 1 + \frac{a}{2\varkappa w}.$$

In any event, this expression allows one to estimate approximately the reduction in the sedimentation potential which is brought about by the incomplete polarizability of the drops.

The fall of mercury drops in a liquid containing mercury ions should cause a change in the mercury ion concentration in addition to a separation of the electric charges.

For positively charged drops, the concentration will increase in the upper portion of the column and decrease in the lower portion. This should result in the appearance of a definite potential difference between mercury electrodes of the first kind in contact with the

solution, the sign of which is opposite to that of the sedimentation potential. In contrast to the latter, this potential difference does not vanish when the fall of drops through the solution ceases, but remains until such time as the concentration difference in the column is equalized by diffusion. If the mercury enters the upper part of the column in the form of drops and these drops combine into a single mass at the lower end, concentration differences that are well known in the theory of the dropping electrode also appear. In this case, the mercury ion concentration decreases in the upper part of the column and increases in the lower part; i.e., the sign of the change is opposite to that caused by the process of fall. It is possible that this may explain some of the phenomena observed by Billitzer in his experiments with dropping electrodes.

An experimental verification of equation (103.2) was made by A. N. Frumkin and I. A. Bagotskaya [23]. To assure the condition $Re \ll 1$, the mercury drops were allowed to fall in a solution of KBr

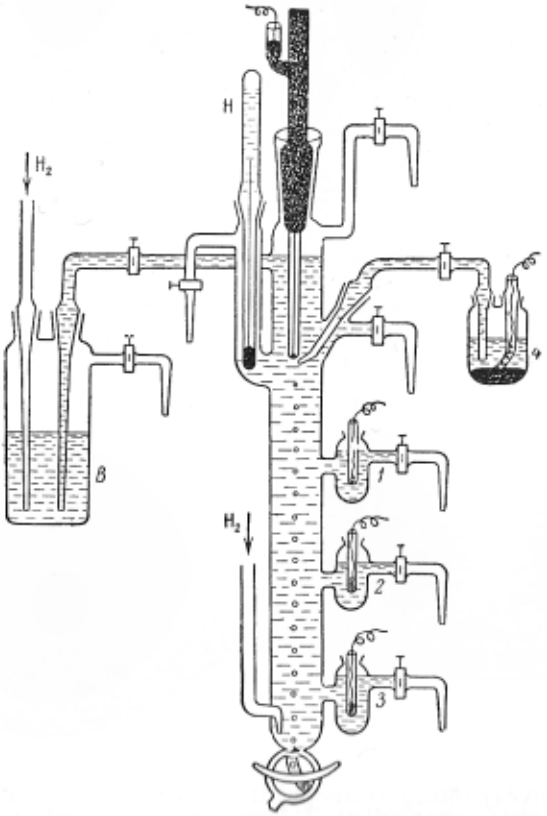

Figure 80. Instrument for determining the potential of falling drops.

in glycerine (with a viscosity of about 10 poises). The instrument for measuring the potential of the falling drops is shown in Figure 80. These potentials were measured by means of electrodes 1, 2, and 3, situated at distances of 4 and 5.7 cm from each other. The drops were charged by means of the current from an external emf through the auxiliary electrode 4. Drops 0.06 cm in radius fell at a velocity of 1 cm/sec. The distance between them in the column was about 0.4 cm, so that the shower would not be considered dense. The potentials created by the drops may consequently be assumed to be additive when forming the total potential E. In the case of a viscous solution, the viscosity of mercury in formula (103.2) can be neglected, and we can write:

$$E = \frac{\varepsilon n a}{2\mu\varkappa + \varepsilon^2} \frac{4\pi a^3}{3} g(\rho - \rho'). \qquad (103.10)$$

Figure 81 depicts the curves which characterize the decrease in the potential E over a column of unit length as a function of ϵ in 0.03 N KBr in glycerine. The two curves which are presented compare a theoretical one, computed according to equation (103.10), and one measured experimentally. It is seen that the agreement between them is entirely satisfactory.

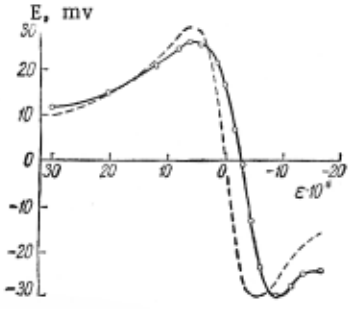

Figure 81. Dependence of the potential E of falling drops on the charge density ϵ in 0.03 N KBr in glycerine:
---- theoretical curve; $\mu = 9.0, \varkappa = 1.1 \cdot 10^{-5}$; ooo observed values for E.

The observed slight shift between the experimental curve relative to the theoretical one is apparently caused by discharge of the drops due to residual traces of oxygen in the solution. This is indicated directly by a sharp increase in the effect with an increase in the

amount of dissolved oxygen (when the solution is cleaned less thoroughly). It should also be pointed out that the observed potentials of the falling drops exceeded those of a column of falling solid particles by a factor of 10^5 to 10^6.

104. EFFECT OF A MAGNETIC FIELD ON THE FALL OF DROPS OF MERCURY [27]

The effect of a magnetic field on the processes that occur in electrolysis has been given little study to date. It would be of interest, therefore, to clarify the question of whether a magnetic field can have an effect on the motion of mercury drops.

We shall conduct the examination in a system in which the drop is at rest. Let us assume that an external magnetic field of strength H is applied to a drop falling in a gravitational field. Let the magnetic field be in a direction perpendicular to the vertical axis and let us direct the y axis along the magnetic field and the z axis vertically downward.

The total current flowing through the system (the falling drop) is zero. We have seen, however, that there exists a distribution of surface and volume currents in the system, which compensate each other only in terms of the resulting net current. The potential distribution outside the double layer is determined by equation (102.23), so there is a current in the bulk of the solution around the drop, with a density j

$$\mathbf{j}^{\text{soln}} = -\varkappa \operatorname{grad} \varphi.$$

When a volume current flows, the Lorentz force per unit volume of solution is

$$\mathbf{F}^{\text{soln}} = \frac{1}{c}[\mathbf{j}^{\text{soln}}\mathbf{H}]. \tag{104.1}$$

In addition to the volume current outside the drop, there is also a current within the drop. Indeed, the surface current formed by the motion of the charges in the inner sheet of the double layer forms a volume current inside the drop as required by the law of conservation of charge, which states that

$$\operatorname{div}(\mathbf{j}_{\text{sur}}) + j_n^{\text{mer}} = 0, \tag{104.2}$$

where $\mathbf{j}_{\text{sur}}$ is the surface current, equal to

$$\mathbf{j}_{\text{sur}} = -\varepsilon \mathbf{v}_t,$$

and j_n^{mer} is the component of the current in the drop normal to its surface. By substituting the value for v_t, we obtain:

$$\operatorname{div} \mathbf{j}_{\text{sur}} = -\frac{2\varepsilon v_0 \cos\theta}{a}, \tag{104.3}$$

so that, with the aid of (104.2) and (104.3), the current inside the drop is:

$$\mathbf{j}^{\text{mer}} = -\frac{2v_0\varepsilon}{a}\mathbf{k},$$

where k is the unit vector in the direction of the z axis. Then the force exerted on a unit volume of the mercury drop is

$$\mathbf{F}^{\text{mer}} = \frac{1}{c}[\mathbf{j}^{\text{mer}}\mathbf{H}] = \frac{2v_0\varepsilon H}{ac}\mathbf{i}, \tag{104.4}$$

where i is the unit vector in the direction of the x axis.

The force exerted by the magnetic field on the double layer is equal to zero since the sheets of the double layer have opposite charges and move in the same direction.

Now that the system of volume forces exerted on the solution and on the liquid inside the drop has been determined, we may write the equations of motion for both liquids. Namely, in the system of coordinates in which the drop is at rest, we have for the exterior liquid (the solution),

$$\left.\begin{aligned} \operatorname{grad}\frac{p}{\rho} &= \nu\Delta\mathbf{v} + \frac{V(\rho-\rho')}{\rho}g\mathbf{k} + \mathbf{F}^{\text{soln}}, \\ \operatorname{div}\mathbf{v} &= 0. \end{aligned}\right\} \tag{104.5}$$

Similarly, for the interior liquid (the mercury),

$$\left.\begin{aligned} \operatorname{grad}\frac{p'}{\rho'} &= \nu'\Delta\mathbf{v}' + \mathbf{F}^{\text{mer}} \\ \operatorname{div}\mathbf{v}' &= 0. \end{aligned}\right\} \tag{104.6}$$

The following system of boundary conditions must be fulfilled at the interface between the two liquids

$$\left.\begin{aligned} p_{rr} &= p'_{rr} + p_\sigma, \\ p_{r\theta} &= p'_{r\theta}, \\ p_{r\varphi} &= p'_{r\varphi}, \\ v_r &= v'_r = 0, \\ v_\theta &= v'_\theta, \\ v_\varphi &= v'_\varphi \end{aligned}\right\} \quad \text{at} \quad r = a. \tag{104.7}$$

In addition, the velocity of the interior liquid must remain finite at $r = 0$.

The difference between these equations and boundary conditions and those for a drop falling by gravity in the absence of a magnetic field is due to the fact that in the presence of a magnetic field the velocity component v_φ and the corresponding components of the stress tensor cannot equal zero.

We seek a solution of the above system of equations and boundary conditions by assuming that the velocity acquired by the drop under the action of the magnetic field is small compared to that which it develops in the field of gravity. This assumption, which is fulfilled for all reasonable values of magnetic field strength, permits a solution of the problem by the method of successive approximations.

Let us write the velocities and pressures for the interior and exterior liquids in the form

$$\mathbf{v} = \mathbf{v}_0 + \mathbf{v}_1,$$
$$p = p_0 + p_1,$$
$$\mathbf{v}' = \mathbf{v}_0' + \mathbf{v}_1',$$
$$p' = p_0' + p_1',$$

where the subscript zero designates the values of the quantities in the absence of a magnetic field, and the quantities with the subscript 1 satisfy the following equations

$$\left.\begin{aligned} \operatorname{grad}\frac{p_1}{\rho} &= \nu\Delta\mathbf{v}_1 + \mathbf{F}^{\text{soln}}, \\ \operatorname{div}\mathbf{v}_1 &= 0, \end{aligned}\right\} \tag{104.8}$$

$$\left.\begin{aligned} \operatorname{grad}\frac{p_1'}{\rho'} &= \nu'\Delta\mathbf{v}_1' + \mathbf{F}^{\text{mer}} \\ \operatorname{div}\mathbf{v}_1' &= 0. \end{aligned}\right\} \tag{104.9}$$

We seek a solution of equations (104.8) and (104.9) in the form

$$\left.\begin{aligned} v_r &= f(r)\sin\theta\cos\varphi, \\ v_\theta &= \Psi(r)\cos\theta\cos\varphi, \\ v_\varphi &= \sin\varphi\,[\alpha(r) + \beta(r)\sin^2\theta], \\ p &= \mu\gamma(r)\sin\theta\cos\varphi, \end{aligned}\right\} \tag{104.10}$$

where $f(r)$, $\Psi(r)$, $\alpha(r)$, and $\beta(r)$ are unknown functions of the radius, and where θ and φ are the appropriate angles in a system of spherical coordinates.

If equation (104.8) is expressed in spherical coordinates, it can be shown that the above radial functions must satisfy the system of equations

$$\left.\begin{aligned} \alpha(r) &= -\Psi(r), \\ f' - \frac{2\Psi}{r} + \frac{2f}{r} + \frac{\beta}{r} &= 0, \\ -\gamma' + \frac{4f'}{r} + f'' - \frac{\varepsilon v_0 a^2 H}{c\mu r^3} &= 0, \\ \frac{\gamma}{r} + \alpha'' + \frac{2\alpha'}{r} + \frac{2\beta}{r^2} - \frac{2f}{r^2} + \frac{2\Psi}{r^2} - \frac{2\varepsilon v_0 a^2 H}{c\mu r^3} &= 0, \\ \beta'' + \frac{2\beta'}{r} - \frac{6\beta}{r^2} + \frac{3\varepsilon v_0 a^2 H}{c\mu r^3} &= 0. \end{aligned}\right\} \tag{104.11}$$

Here the prime marks above the functions indicate differentiation with respect to r.

The liquid motion inside the drop is determined by means of similar equations.

The solution of this system can be effected by standard methods and results in the following expressions for the velocities and pressure inside the drop

$$\left.\begin{aligned} v_r' &= (F + Xr^2)\sin\theta\cos\varphi, \\ v_\theta' &= \left(F + \frac{B}{2}r^2 + 2Xr^2\right)\cos\theta\cos\varphi, \\ v_\varphi' &= \sin\varphi\left[\left(-F - \frac{B}{2}r^2 - 2Xr^2\right) + Br^2\sin^2\theta\right], \\ p' &= 10X\mu' r\sin\theta\cos\varphi + \frac{2v_0\varepsilon H}{ac}r\sin\theta\cos\varphi, \end{aligned}\right\} \tag{104.12}$$

where the quantities F, X, and B are integration constants. These velocities remain finite at the origin of the coordinates.

Also, we define

$$n = \frac{v_0\varepsilon H}{c}; \tag{104.13}$$

then the solution of a system of equations similar to (104.11) yields for the velocities and the pressure outside the drop:

$$\begin{aligned} v_r &= \left(\frac{D_1}{r^3} + \frac{E_1}{r} + U\right)\sin\theta\cos\varphi, \\ v_\theta &= \left(\frac{A_1 - D_1}{2r^3} + \frac{na^2}{4\mu r} + \frac{E_1}{2r} + U\right)\cos\theta\cos\varphi, \\ v_\varphi &= \sin\varphi\left[\left(\frac{D_1 - A_1}{2r^3} - \frac{na^2}{4\mu r} - \frac{E_1}{2r} - U\right) + \left(\frac{A_1}{r^3} + \frac{na^2}{2\mu r}\right)\sin^2\theta\right], \\ p &= \mu\left(\frac{na^2}{2\mu r^2} + \frac{E_1}{r^2}\right)\sin\theta\cos\varphi. \end{aligned}$$

These velocities remain finite as $r \to \infty$.

The constants F_1, D_1, E_1, A_1, etc., appearing in the velocities must be determined from boundary conditions (104.7), which yield the following system of equations:

$$\begin{aligned} F + Xa^2 &= 0, \\ \frac{D_1}{a^3} + \frac{E_1}{a} + U &= 0, \\ F + \frac{Ba^2}{2} + 2Xa^2 &= \frac{A_1}{2a^3} - \frac{D_1}{2a^3} + \frac{na}{4\mu} + \frac{E_1}{2a} + U, \\ Ba^2 &= \frac{A_1}{a^3} + \frac{na}{2\mu}, \\ \mu' Ba &= \left(-\frac{4A_1}{a^4} - \frac{n}{\mu}\right)\mu, \\ -6Xa\mu' - 2n &= -\frac{n}{2} - \frac{3\mu E_1}{a^2} - \frac{6D_1\mu}{a^4}, \\ \mu'\left(3Xa + \frac{Ba}{2}\right) &= \mu\left(\frac{3D_1}{a^4} - \frac{n}{2\mu} - \frac{2A_1}{a^4}\right). \end{aligned}$$

The solution of this somewhat involved system of equations yields the velocity of the liquid motion at infinity relative to the drop. It is found to be directed along the x axis, i.e., in a direction perpendicular to the magnetic field, and equal to

$$U = -\frac{a}{\mu}\frac{v_0 \varepsilon H}{c}\frac{\mu + \mu'}{3\mu' + 2\mu}, \tag{104.14}$$

where v_0 is the velocity on the surface. The velocity of the drop in the direction of the x axis is finally found to be

$$U = \frac{ga^3}{3\mu}\frac{\varepsilon H}{c}\frac{(\mu + \mu')(\rho - \rho_1)}{(3\mu' + 2\mu)\left(2\mu + 3\mu' + \frac{s^2}{\varkappa}\right)}. \tag{104.15}$$

Equation (104.15) shows that, as a result of the action of the magnetic field on the system of volume currents, the falling mercury drop acquires a velocity that increases with increasing falling speed and with increasing intensity of the magnetic field. The absolute value of this velocity is not great, since the speed of light c enters into the denominator of (104.15), but numerical estimates show that it has an observable magnitude in fields with an intensity of the order of 10^5 gauss.

BIBLIOGRAPHY

1. Reyss, F.F., Soc. Nat. Met. Moscou 2, 327 (1809).
2. Levich, V. G., Zhur. Fiz. Khim. 21, 689 (1947).
3. Smoluchowski, M. V., in Graetz, Handbuch der Elektrizitat und des Magnetismus, Barth. Leipzig, v. II, p. 366, 1921.
4. Bikerman, Z. physik. Chem. A163, 378 (1933); 171, 209 (1934); Trans. Far. Soc. 36, 154 (1940); A. N. Frumkin and V. G. Levich, Zhur. Fiz. Khim. 21, 399 (1947).
5. Hermans, Phil. Mag. 26, 650 (1938).
6. Henry, D., Proc. Roy. Soc. A133, 106 (1931).
7. Booth, F., Proc. Roy. Soc. A203, 514 (1950); J. Chem. Phys. 18, 1361 (1950).
8. Frumkin, A. N. and V. G. Levich, Zhur. Fiz. Khim. 19, 573 (1945) [for English version, see Acta physicochimica URSS 20, 769 (1945)].
9. Balashova, N. A. and A. N. Frumkin, Doklady Akad. Nauk SSSR 20, 449 (1938) [for German version, see Comp. Rend. Acad. Sci. URSS 20, 449 (1938)].
10. Christiansen, Ann. Phys., ser. 4, 12, 1072 (1903).
11. Frumkin, A. N., Zhur. Russ. Fiz.-Khim. Obshch. 49, 207 (1917).
12. Bodforss, Z. Elektrochem. 29, 121 (1923).
13. Craxford, Phil. Mag. 16, 268 (1933).
14. Craxford, Gatty and McKay, Phil. Mag. 23, 1079 (1937).
15. Bakh, N. A., Acta physicochimica URSS 1, 27 (1934).